We make what matters work*

*Horseless carriages. World War II aircraft. NASA space shuttles. Electric vehicles.

Over the past 100 years, Bussmann series products have protected the things that have propelled our world forward.

And they'll continue to protect for the next 100 years. Because we never lose sight of what matters. And it's our job to make sure it works.

Contents

Description	Section page
Fuse sizing for 600 V building electrical systems	2-3
Selective coordination	4
Low voltage, branch circuit fuse types and classes	5
Glossary of common electrical terms	6-7
Electrical formulas	7
FuseFinder fuse and fuse block cross reference	8-9
Catalog number index	10-14

For information on products not contained in this catalog, contact Customer Satisfaction, toll-free, at 855-287-7626 (855-BUSSMANN) between 7:00 a.m. — 6:00 p.m. Central time, M-F, or email BussCustSat@Eaton.com.

Fuse sizing for 600 V building electrical systems

General guidelines are given for selecting fuse amp ratings for most circuits. For specific applications warranting other fuse sizing, the load characteristics and appropriate NEC sections should be considered. The selections shown here are not, in all cases, the maximum or minimum amp ratings permitted by the NEC. Demand factors as permitted by the NEC are not included. Study the pertinent NEC sections noted by "()" and reference pertinent footnotes.

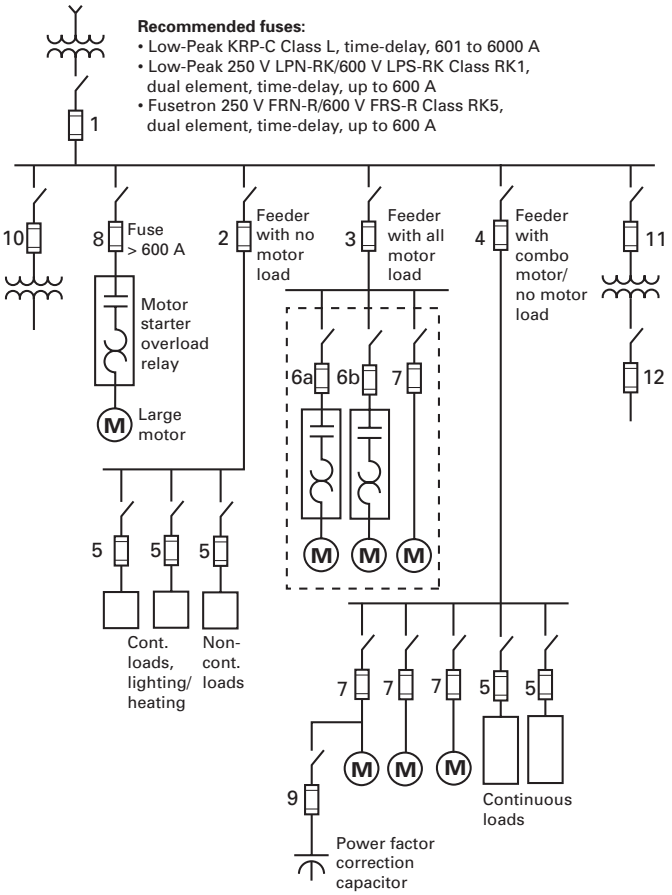

Dual-element, time-delay fuses

Class CF (up to 400 A), and J, RK1 and RK5 (up to 600 A)

For fuses above 600 A, use Class L time-delay fuses with ratings from 601-6000 A. While these fuses are not dual-element construction, the Bussmann series KRP-C-SP is a time-delay fuse.

1. **Main service.** Size fuse according to method in 4 below.
2. **Feeder circuit with no motor loads.** (215.3) The fuse size must be at least 125% of the continuous load† plus 100% of the non-continuous load. Do not size larger than the conductor's ampacity*.
3. **Feeder circuit with all motor loads.** (430.62) Size the fuse at 150% to 175% of the largest motor's full load current** plus the full-load current** of all other motor'sΔ.
4. **Feeder circuit with mixed loadsΔ.** (430.63) Size fuse at sum of:
   a. 150% to 175%†† of the largest motor's full-load current**, plus
   b. 100% of all other motors' full-load current**, plus
   c. 125% of the continuous, non-motor load†, plus
   d. 100% of the non-continuous, non-motor load
5. **Branch circuit with no motor load.** (210.20) The fuse size must be at least 125% of the continuous load† plus 100% of the non-continuous load. Do not size larger than the conductor's ampacity*.
6. **Motor branch circuit with overload relays.** Where overload relays are sized per 430.32 for motor running overload protection, there are various alternatives:

   6a. Motor branch circuit short-circuit and ground fault protection. (430.52) (most common). Size the fuse between 150 to 175%†† of the full load current.** Provides branch circuit short-circuit and ground fault protection only.

   6b. Motor branch circuit short-circuit and ground fault protection (430.52) as well as backup overload protection. Size FRN-R and FRS-R Class RK5 dual-element, time-delay fuses at 125% and LPN-RK-SP and LPS-RK-SP Class RK1 dual-element, time-delay fuses at 130% of motor full-load current or next higher size. This results in closer fuse sizing and provides some backup running overload protection. In addition, it provides motor branch circuit short-circuit and ground fault protection. Sizing in this manner may result in better motor protection if the overload relays are not properly sized or calibrated.
7. **Motor branch circuit with only fuse protection.** Where the fuse is the only motor protection, the following FRS-R and FRN-R, Class RK5, fuses provide motor running overload protection (430.32) and short-circuit protection (430.52):
   - Motor 1.15 service factor or 40°C rise. Size the fuse at 110% to 125% of the motor full-load current on the name plate [430.6(a)(2)].
   - Motor less than 1.15 service factor or over 40°C rise. Size fuse at 100% to 115% of motor full-load current on the name plate [430.6(a)(2)].
8. **Large motor branch circuit.** Fuse larger than 600 A. [436.52(c) and 430.52(c)(1) Exceptions 2(d)]. For large motors, size Low-Peak KRP-C-SP time-delay fuse at 175% to 300% of the motor full-load current**, depending on the starting method; i.e., part-winding starting, reduced voltage starting, etc.
9. **Power factor correction capacitors.** [460.8(b)]. Size dual-element fuses as low as practical, typically 150% to 175% of capacitor rated current.
10. **Transformer primary fuse (without secondary fuse protection).** [450.3(b)] When transformer primary current is equal to or greater than 9 amps, the dual-element, time-delay fuse should be sized at 125% of transformer primary current or the next size larger if 125% does not correspond to a standard fuse size. Note: Secondary conductors must be protected from overcurrent damage per Article 240.
11. **Transformer primary fuse (with secondary fuse protection).** [450.3(b)] May be sized at 250% of transformer primary current if the secondary is fused per 12 below.
12. **The secondary fuse is sized at no more than 125% of secondary full-load current.** [450.3(b)] Note: Secondary conductors must be protected at their ampacities per Article 240.

Non-time delay and all Class CC fuses

(FCF, JKS, KTN-R, KTS-R, JJN, JJS, LP-CC, KTK-R and FNQ-R)

1. **Main service.** Size fuse according to method in 4.
2. **Feeder circuit with no motor loads.** (215.3) The fuse size must be at least 125% of the continuous load† plus 100% of the non-continuous load. Do not size larger than the conductor's ampacity.*
3. **Feeder circuit with all motor loads.** (430.62) Size the fuse at 300% of the largest motor's full-load current** plus the full-load current** of all other motors.
4. **Feeder circuit with mixed loads.** (430.62) Size fuse at sum of:
   a. 300% of the full-load current** of the largest motor, plus
   b. 100% of the full-load current** of all other motors, plus
   c. 125% of the continuous, non-motor load†, plus
   d. 100% of the non-continuous, non-motor load
5. **Branch circuit with no motor loads.** (210.20) The fuse size must be at least 125% of the continuous load† plus 100% of the non-continuous load. Do not size larger than the conductor's ampacity.*

6a. Motor branch circuit with overload relays. (430.52) Size the fuse at 300% of the full load current**. Provides branch circuit short-circuit and ground fault protection only. Other means must be utilized to provide motor overload protection (see 430.32). (If 300% is not a standard fuse amp rating, 430.52(C)(1) Exception 1 permits the next standard fuse amp rating. If the motor cannot start with this size fuse, 430.52(C)(1) Exception 2 permits increasing the fuse size up to 400% provided the fuse rating does not exceed 600 A.)

6b. Motor branch circuit short-circuit and ground fault protection (430.52) as well as backup overload protection. Not applicable for non-time-delay fuses; use FRN-R and FRS-R, Class RK5, dual-element time-delay fuses or LPN-RK-SP and LPS-RK-SP Class RK1, dual-element, time-delay fuses (see 6b under dual-element time-delay fuse selection). Non-time-delay fuses cannot be sized close enough to provide motor running backup overload protection. If sized for motor overload backup protection, non-time-delay fuses would open due to motor starting current.

7. **Motor branch circuit with only fuse protection.** Not applicable for non-time-delay fuses; use FRN-R and FRS-R, Class RK5, dual-element time-delay fuses (see 7 under dual-element time-delay fuse selection). Non-time-delay fuses cannot be sized close enough to provide motor running overload protection. If sized for motor overload protection, non-time-delay fuses would open due to motor starting current.
8. **Power factor correction capacitors.** [460.8(B)] Size non-time-delay fuses as low as practical, typically 250% to 300% of capacitor rated current.

Conductor ampacity selection

1. **Feeder circuit and main circuit with mixed loads.** (430.24) conductor ampacity at least sum of:
   a. 100%†† of the full-load current** of the largest motor, plus
   a. 100% of the full-load current** of all other motors, plus
   c. 125% of the continuous, non-motor load†, plus
   d. 100% of the non-continuous, non-motor load
2. **Feeder circuit with no motor load.** [215.2(a)(1)] Conductor ampacity at least 125% of the continuous load plus 100% of the non-continuous load.
3. **Feeder circuit with all motor loads.** (430.24) Conductor ampacity at least 125% of the largest motor full-load amps plus 100% of all other motors' full-load amps.
4. **Feeder circuit with mixed loads.** (430.24) Size according to method 1 above.
5. **Branch circuit with no motor load.** [210.19(a)(10] Conductor ampacity at least 125% of the continuous load plus 100% of the non-continuous load.

6, 7 and 8. Motor branch circuits. (430.22) Conductor ampacity at least 125% of the motor full-load current.

9. **Capacitor connected to motor branch circuit.** (460.8) Conductor ampacity at least 135% of capacitor rated current, and at least 1/3 the motor circuit conductors' ampacity.

10, 11. Conductor ampacity minimum 125% of transformer full-load current.

12. Conductor ampacity per 1 above.

† 100% of the continuous load can be used rather than 125% when the switch and fuse are listed for 100% continuous operation as an assembly (e.g., 215.3 Exc 1). Some bolted pressure switches and high pressure contact switches 400 A to 6000 A with Class J and L fuses in specified assemblies are listed for 100% continuous operation.

* Where conductor ampacity does not correspond to a standard fuse amp rating, the next higher amp rating fuse is permitted when 800 A or less [(240.4(B)]. Above 800 A the conductor ampacity must be equal or greater than the fuse amp rating [(240.4(C)]. However, per 240.91(B), when above 800 A for supervised industrial installations, the conductor ampacity is permitted to be 95% of the fuse amp rating as long as the equipment is listed for that size conductor and the conductor is protected within its time vs. current limits [240.4 Informational Note].

Δ In many motor feeder applications dual-element fuses can be sized at ampacity of feeder conductors.

• Available short-circuit current and the clearing time of the overcurrent device must be considered so that the conductor's ICEA (P32.382) withstand rating is not exceeded.

** On general motor applications, motor full load amps for calculating conductor ampacity and for calculating fuse amp ratings for motor branch circuit short-circuit and ground fault protection (430.52) are selected from NEC Tables 430.247 through 430.250 per 430.6(A)(1). However, the motor nameplate current rating is used for sizing motor overload protection (430.32) per 430.6(A)(2).

†† 430.52(C)(1) allows a maximum of 175% for time-delay fuses, for all but wound rotor and DC motors. A range of 150% to 175% was used for these guidelines, even though 430.52(C)(1) allows a maximum of 175% for time-delay fuses as stated above. The reason for showing this range is to highlight the possibility for application selection. In some situations, there may be a difference in the switch amp rating or fuse block amp rating in selecting 150% versus 175%. Using 175% is permitted and is suggested for heavy starting current or longer starting time applications.
Further note: the NEC permits larger sizing via two exceptions. 430.52(C)(1) Exception 1 permits the next standard size if 175% does not correspond with a standard fuse amp rating. If the motor cannot start with this size fuse, 430.52(C)(1) Exception 2 permits increasing a time-delay fuse size up to 225%.
(Note that while a time-delay fuse may not exceed 225% when using Exception 2, using a time-delay fuse could exceed 225% when applying Exception 1. For example, assume a motor with a FLA of 1.0 amp. 430.52(C)(1) would allow a 1.75 amp fuse. Exception 1 would allow a 3 amp time-delay fuse per 240.6(A). Exception 2 limits the time-delay fuse to 2.25 amps as a maximum, but Exception 2 is not utilized or needed if Exception 1 is adequate.)

*** The conductor ampacity may have to be greater due to using adjustment or correction factors per 210.(19)(A)(1) and 215.2(A)(1).

Selective coordination

While important, selecting overcurrent protective devices (OCPDs) based solely on their ability to carry system load current and interrupting the maximum fault current at their respective application points is not enough. As the demand for power system reliability increases, the OCPD's performance in the system becomes more and more critical as its function should, ideally, limit a power system outage to only that portion of the circuit which is faulted. The selected OCPD types and ratings (or settings) determine whether they are selectively coordinated upstream and downstream in a system so that only the nearest upstream OCPD will open for the full range of overcurrents and opening times, and leave the remainder of the system undisturbed to preserve service continuity.

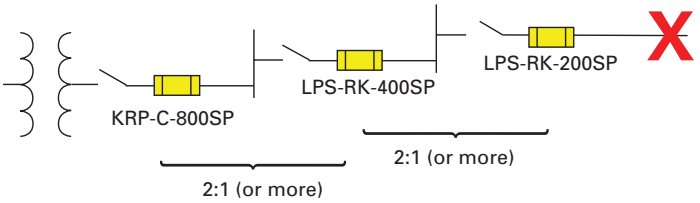

Figure 1 Low-Peak fuses applied with a simple 2:1 amp rating ratio achieves selective coordination.

Figure 1 shows the minimum amp rating ratios for Bussmann series Low-Peak fuses required to provide "selective coordination" (discrimination) between upstream and downstream fuses.

It's a simple matter to selectively coordinate a system using published fuse amp rating ratio tables and maintaining the minimum ratios between an upstream and downstream fuse. This will ensure selective coordination is achieved for all fault currents up to the fuse's interrupting rating. These selectivity ratios are for all overcurrent levels up to the fuse interrupting or 200 kA, whichever is lower.

For an in-depth examination of this subject, see selective coordination in Section 4 of the Selecting Protective Devices handbook, publication number 3002.

Coordination, Selective (selective coordination)

Localization of an overcurrent condition to restrict outages to the circuit or equipment affected, accomplished by the selection and installation of overcurrent protective devices and their ratings or settings for the full range of available overcurrents, from overload to the maximum available fault current, and for the full range of overcurrent protective device opening times associated with those overcurrents.

Selective coordination is mandatory per the NEC for the circuit paths of some vital loads on specific systems including:

- Elevator circuits — 620.62
- Critical operations data systems — 645.27
- Campus style fire pumps — 695.3
- Emergency systems — 700.32
- Legally required standby systems — 701.27
- Critical operations power systems — 708.54

Bussmann series fuse selectivity ratios

This selectivity ratio table identifies the fuse amp rating ratios that ensure selective coordination.

Circuit				Downstream / loadside fuse											
	Amp rating range →			601-6000 A	601-4000 A	1-100 A	0-600 A			601-6000 A	0-600 A	0-1200 A	0-600 A	0-60 A	0-30 A
		Fuse type →		Time-delay	Time-delay	Time-delay	Dual-element, time-delay			Fast-acting	Fast-acting	Fast-acting	Fast-acting	Time-delay	
			Trade name (fuse class) →	Low-Peak (L)	Limitron (L)	CUBEFuse (CF[2])	Low-Peak (J)	Low-Peak (RK1)	Fusetron (RK5)	Limitron (L)	Limitron (RK1)	Limitron (T)	Limitron (J)	SC (G)	(CC)
			Bussmann fuse symbol	KRP-C_SP	KLU	TCF	LPJ-SP	LPN-RK-SP LPS-RK-SP	FRN-R FRS-R	KTU	KTN-R KTS-R	JJN JJS	JKS	SC	LP-CC FNQ-R KTK-R
Upstream / lineside fuse	601 to 6000 A	Time-delay	Low-Peak (L)	2:1	2.5:1	2:1	2:1	2:1	4:1	2:1	2:1	2:1	2:1	2:1	2:1
	601 to 4000 A	Time-delay	Limitron (L)	2:1	2:1	2:1	2:1	2:1	4:1	2:1	2:1	2:1	2:1	2:1	2:1
	0 to 600 A	Dual-element	Low-Peak (RK1)	LPN-RK-SP LPS-RK-SP	—	—	2:1	2:1	2:1	8:1	—	3:1	3:1	3:1	4:1	2:1
	0 to 600 A	Dual-element	Low-Peak (J)	LPJ-SP	—	—	2:1	2:1	2:1	8:1	—	3:1	3:1	3:1	4:1	2:1
	0 to 100 A	Dual-element	CUBEFuse (CF[2])	TCF	—	—	2:1	2:1	2:1	8:1	—	3:1	3:1	3:1	4:1	2:1
	0 to 600 A	Dual-element	Fusetron (RK5)	FRN-R FRS-R	—	—	1.5:1	1.5:1	1.5:1	2:1	—	1.5:1	1.5:1	1.5:1	1.5:1	2:1
	601 to 6000 A	Fast-acting	Limitron (L)	KTU	2:1	2.5:1	3:1	3:1	3:1	6:1	2:1	2:1	2:1	2:1	2:1	2:1
	0 to 600 A	Fast-acting	Limitron (RK1)	KTN-R KTS-R	—	—	3:1	3:1	3:1	8:1	—	3:1	3:1	3:1	4:1	—
	0 to 1200 A	Fast-acting	Limitron (T)	JJN JJS	—	—	3:1	3:1	3:1	8:1	—	3:1	3:1	3:1	4:1	—
	0 to 600 A	Fast-acting	Limitron (J)	JKS	—	—	3:1	3:1	3:1	8:1	—	3:1	3:1	3:1	4:1	—
	0 to 60 A	Time-delay	SC (G)	SC	—	—	3:1	3:1	3:1	4:1	—	2:1	2:1	2:1	2:1	—

General notes: Ratios given in this table apply to only Bussmann fuses. When fuses are within the same case size, consult Bussmann.

1. Where applicable, ratios are valid for indicating and non-indicating versions of the same fuse. At some values of fault current, specified ratios may be lowered to permit closer fuse sizing. Consult Bussmann.
2. Time-delay Class CF TCF CUBEFuse OCPDs are 1 to 100 A Class J performance; dimensions and construction are a unique, finger-safe design.

Low voltage, branch circuit fuse types and classes

The NEC defines the branch circuit OCPD as capable of providing protection for service, feeder and branch circuits, and equipment over the full range of overcurrents between its rated current and its interrupting rating. They're also the only OCPDs the NEC permits to be installed in a building's electrical system. The definition found in Article 100 is as follows:

"Overcurrent Protective Device, Branch Circuit. A device capable of providing protection for service, feeder, and branch-circuits and equipment over the full-range of overcurrents between its rated current and its interrupting rating. Such devices are provided with interrupting ratings appropriate for the intended use but no less than 5,000 amperes."

Per this definition, branch circuit OCPDs are suitable to protect branch or feeder circuits and service conductors at any point in the electrical system, and must be capable of protecting against the full range of overcurrents, including overloads and faults. In addition, the OCPD must have an interrupting rating sufficient for the application per NEC 110.9. Branch circuit OCPDs meet common, minimum standard requirements for spacing and operating time-current characteristics defined by UL.

The table below contains the acceptable fuses that can be used for branch circuit protection.

Device type	Acceptable devices	Bussmann series fuses
UL 248 branch circuit fuses	Class CC	LP-CC, FNQ-R, KTK-R
	Class CF	TCF, FCF
	Class G	SC
	Class H(K)	NON, NOS
	Class J	LPJ-, JKS, DFJ
	Class L	KRP-C, KLU, KTU
	Class RK1	LPN-RK, LPS-RK, KTN-R, KTS-R
	Class RK5	FRN-R, FRS-R
	Class T	JJN, JJS
	Plug fuses	W, T, TL, S, SL

The UL 248 fuse standards cover distinct low-voltage (600 volts or less) fuse classes. Of these, modern current-limiting fuse Classes CC, CF, G, J, L, R and T are the most important. The branch circuit current-limiting fuses' rejection feature helps ensure electrical system safety over its life because it prevents installing other fuse types or larger case sizes. Thus, fuses that cannot provide a comparable minimum protection level for critical ratings and performance cannot be inadvertently installed.

This is inherent in all current-limiting fuse classes. Each fuse class must meet:

- Maximum let-through limits (I_p and I^2t) during fault conditions
- Minimum voltage ratings
- Minimum 200 kA interrupting ratings for Class CC, CF, J, L, R and T
- Physical rejection of
  - Different fuse classes and case sizes*
  - Non current-limiting fuses

* Branch circuit fuse blocks and holders are made to hold a fuse class case size that corresponds to a particular amp range. This prevents fuses from the same class with a larger case size from being installed and helps prevent overfusing. There are instances where it is desirable to install a class fuse with a smaller case size than the block or holder. For these situations, it is permitted to use fuse reducers.

These product standards ensure branch circuit fuses provide specific, minimum circuit protection when current-limiting fuses and equipment are used. A given fuse class will ensure the voltage and interrupting rating, and degree of current limitation for the electrical system's life.

For example, by using Class J fuses and equipment, only Class J fuses can be installed. This ensures the voltage rating is always 600 V (whether the system is 120, 208, 480, or 575 V), the interrupting rating is at least 200 kA, and the fault current protection provided by its current-limiting, let-through characteristics. If the fuse needs replacing, only a Class J fuse can be installed.

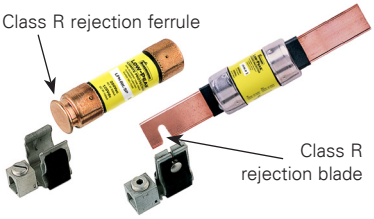

Class R fuse rejection clips (restriction on the ferrule or notch on the blade) that will only accept Class R fuses.

Common current-limiting Bussmann series fuses

FRN-R — Class RK5, 250 V, 200 kA IR up to 600 A

LPN-RK — Class RK1, 250 V, 300 kA IR up to 600 A

FRS-R — Class RK5, 600 V, 200 kA IR up to 600 A

LPS-RK — Class RK1, 600 V, 300 kA IR up to 600 A

LPJ — Class J, 600 V, 300 kA IR up to 600 A

LP-CC, FRQ-R, KTK-R — Class CC, 600 V, 200 kA IR up to 30 A

JJN — Class T, 300 V, 200 kA IR up to 1200 A

JJS — Class T, 600 V, 200 kA IR up to 800 A

Glossary of common electrical terms

Ampere (amp) — The measurement of intensity of rate of flow of electrons in an electrical circuit. An amp is the amount of current that will flow through a resistance of one ohm under a pressure of one volt.

Amp rating — The current-carrying capacity of a fuse. When a fuse is subjected to a current above its amp rating, it will open the circuit after a predetermined period of time.

Amp squared seconds, I^2t —The measure of heat energy developed within a circuit during the fuse's clearing. It can be expressed as "Melting I^2t", "Arcing I^2t" or the sum of them as "Clearing I^2t". "I" stands for effective let-through current (RMS), which is squared, and "t" stands for time of opening, in seconds.

Arcing time — The amount of time from the instant the fuse link has melted until the overcurrent is interrupted, or cleared.

Breaking capacity — (See Interrupting rating)

Cartridge fuse — A fuse consisting of a current responsive element inside a fuse tube with terminals on both ends.

Class CC fuse — 600 V, 200 kA amp interrupting rating, branch circuit fuses with overall dimensions of 13/32" x 1-1/2". Their design incorporates a rejection feature that allows them to be inserted into rejection fuse holders and fuse blocks that reject all lower voltage, lower interrupting rating 13/32" x 1-1/2" fuses. They are available from 1/10 through 30 amps.

Class CF fuse — A finger-safe UL Listed branch circuit rated fuse. Available in time-delay or fast-acting versions, the Class CF fuse has Class J electrical performance and is available in ratings from 1 to 100 A in 30, 60 and 100 A case sizes.

Class G fuse — A size rejecting branch circuit fuse in ratings from 1/2 through 20 amps (600 Vac) and 25 through 60 amps (480 Vac) with a 100 kA interrupting rating. The size rejecting feature helps to eliminate overfusing. The fuse diameter is 13/32" while the length varies from 1-5/16" to 2-1/4".

Class H fuse — 250 V and 600 V, 10 kA interrupting rating branch circuit fuses that may be renewable or non-renewable. These are available in ratings from 70 through 600 amps.

Class J fuse — These rejection style fuses are rated to interrupt a minimum of 200 kA AC. They are labeled as "current-limiting", are rated for 600 Vac and are not interchangeable with other classes. They are available from 1 through 600 amps.

Class K fuses — These are fuses listed as K-1, K-5, or K-9 fuses. Each subclass has designated I^2t and I_p maximums. These are dimensionally the same as Class H fuses, and they can have interrupting ratings of 50 kA, 100 kA, or 200 kA. While these fuses are current-limiting, they are not marked "current-limiting" on their label since they do not have a rejection feature.

Class L fuse — These fuses are rated for 601 through 6000 amps, and are rated to interrupt a minimum of 200 kA AC. They are labeled "current-limiting" and are rated for 600 Vac. They are intended to be bolted into their mountings and are not normally used in clips. Some Class L fuses have designed-in time-delay features for all purpose use.

Class R fuse — These are high performance fuses rated 1/10 through 600 amps in 250 V and 600 V ratings. All are marked "current-limiting" on their label and all have a minimum of 200 kA interrupting rating. They have identical outline dimensions with the Class H fuses but have a rejection feature that prevents the user from mounting a fuse of lesser capabilities (lower interrupting capacity) when used with special Class R Clips. Class R fuses will fit into either rejection or non-rejection clips.

Class T fuse — An industry class of 300 V and 600 V fuses in ratings from 1 through 1200 amps (300 V) and 1 through 800 amps (600 V). They are physically very small and can be applied where space is at a premium. They are fast-acting fuses, with an interrupting rating of 200 kA RMS.

Classes of fuses — The industry has developed basic physical specifications and electrical performance requirements for fuses with voltage ratings of 600 V or less. These are known as standards. If a type of fuse meets the requirements of a standard, it can fall into that class. Typical UL branch circuit fuse classes are CC, CF, G, H, J, K, L, RK1, RK5 and T.

Clearing time — The total time between the beginning of the overcurrent and the final opening of the circuit at rated voltage by an overcurrent protective device. Clearing time is the total of the melting time and the arcing time.

Current limitation — A fuse operation relating to short-circuits only. When a fuse operates in its current-limiting range, it will clear a short-circuit in less than 1/2 cycle. Also, it will limit the instantaneous peak let-through current to a value substantially less than that obtainable in the same circuit if that fuse were replaced with a solid conductor of equal impedance.

Dual-element fuse — A fuse with a special design that utilizes two individual-elements in series inside the fuse tube. One element, the spring actuated trigger assembly, operates on overloads up to 5 - 6 times the fuse current rating. The other element, the short-circuit section, operates on short-circuits up to its interrupting rating.

Electrical load — The part of the electrical system that actually uses the energy or does the work required.

Fast-acting fuse — A fuse that opens on overload and short-circuits very quickly. This type of fuse is not designed to withstand temporary overload currents associated with some electrical loads, when sized near the full load current of the circuit.

Fault current — Fault currents can be short-circuit currents, ground fault currents or arcing fault currents.

Fuse — An overcurrent protective device with a fusible link that operates and opens the circuit on an overcurrent condition.

High speed fuse — A fuse with no intentional time-delay in the overload range and designed to open as quickly as possible in the short-circuit range. These fuses are often used to protect solid-state devices.

Inductive load — An electrical load which pulls a large amount of current – an inrush current – when first energized. After a few cycles or seconds, the current "settles down" to the full-load running current.

Interrupting rating — The rating which defines a fuse's ability to safely interrupt and clear short-circuits. This rating is much greater than the amp rating of a fuse. The NEC defines interrupting rating as "The highest current at rated voltage that an overcurrent protective device is intended to interrupt under standard test conditions."

Melting time — The amount of time required to melt the fuse link during a specified overcurrent. (See arcing time and clearing time.)

"NEC" Dimensions — These are dimensions once referenced in the NEC. They are common to Class H and K fuses and provide interchangeability between manufacturers for fuses and fusible equipment of given amp and voltage ratings.

Ohm — The unit of measure for electric resistance. An ohm is the amount of resistance that will allow one amp to flow under a pressure of one volt.

Ohm's Law — The relationship between voltage, current, and resistance, expressed by the equation E = IR, where E is the voltage in volts, I is the current in amps, and R is the resistance in ohms.

One time fuse — Generic term used to describe a Class H non-renewable cartridge fuse, with a single-element.

Overcurrent — Any current in excess of the rated current of equipment or the ampacity of a conductor. It may result from overload, short-circuit or ground fault. (Ref. NEC Article 100.)

Overload — Operation of equipment in excess of normal, full load rating, or of a conductor in excess of rated ampacity that, when it persists for a sufficient length of time, would cause damage or dangerous overheating. A fault, such as a short-circuit or ground fault, is not an overload. (Ref. NEC Article 100.)

Peak let-through current, I_p — The instantaneous value of peak current let-through by a current-limiting fuse, when it operates in its current-limiting range.

Renewable fuse (600 V and below) — A fuse in which the element, typically a zinc link, may be replaced after the fuse has opened, and then reused. Renewable fuses are made to Class H standards.

Resistive load — An electrical load which is characteristic of not having any significant inrush current. When a resistive load is energized, the current rises instantly to its steady-state value, without first rising to a higher value.

RMS current — The RMS (root-mean-square) value of any periodic current is equal to the value of the direct current which, flowing through a resistance, produces the same heating affect in the resistance as the periodic current does.

Semiconductor fuse — Fuses used to protect solid-state devices. See "high speed fuse."

Short-circuit — Can be classified as an overcurrent which exceeds the normal full load current of a circuit by a factor many times (tens, hundreds or thousands greater). Also characteristic of this type of overcurrent is that it leaves the normal current carrying path of the circuit – it takes a "short cut" around the load and back to the source.

Short-circuit current rating (SCCR) — This term applies to components (single devices) and assemblies (equipment). For the component, it is the maximum fault current it can sustain without the occurrence of excessive damage. For equipment, it is the assembly's rating, generally limited by the lowest component SCCR in the circuit as determined by an approved method such as UL 508A, Supplement SB.

Short-circuit withstand — The maximum current that an unprotected electrical component can sustain for a specified period of time without the occurrence of extensive damage. Typically applies to devices or components that do not have a marked short-circuit current rating, such as conductors, transfer switches or semiconductor devices.

Single-phasing — The condition that occurs when one phase of a three-phase system opens, either in a low voltage (secondary) or high voltage (primary) distribution system. Primary or secondary single-phasing can be caused by any number of events. This condition results in unbalanced currents in polyphase motors and unless protective measures are taken, may cause overheating and failure.

Threshold current — The symmetrical RMS (root mean square) available current at the threshold of the current-limiting range, where the fuse becomes current-limiting when tested to the industry standard. This value can be read off a peak let-through chart where the fuse curve intersects the A—B line. A threshold ratio is the relationship of the threshold current to the fuse's continuous current rating.

Time-delay fuse — A fuse with a built-in delay that allows temporary and harmless inrush currents to pass without opening, but is so designed to open on sustained overloads and short-circuits.

Voltage rating — The maximum open circuit voltage in which a fuse can be used, yet safely interrupt an overcurrent. Exceeding the voltage rating of a fuse impairs its ability to clear an overload or short-circuit safely.

Electrical formulas

To find	Single-phase	Two-phase	Three-phase	Direct current
Amps when kVA is known	$\frac{kVA \times 1000}{E}$	$\frac{kVA \times 1000}{E \times 2}$	$\frac{kVA \times 1000}{E \times 1.73}$	Not applicable
Amps when horsepower is known	$\frac{Hp \times 746}{E \times \% \text{ eff.} \times pf}$	$\frac{Hp \times 746}{E \times 2 \times \% \text{ eff.} \times pf}$	$\frac{Hp \times 746}{E \times 1.73 \times \% \text{ eff.} \times pf}$	$\frac{Hp \times 746}{E \times \% \text{ eff.}}$
Amps when kilowatts are known	$\frac{kW \times 1000}{E \times pf}$	$\frac{kW \times 1000}{E \times 2\ pf}$	$\frac{kW \times 1000}{E \times 1.73 \times pf}$	$\frac{kW \times 1000}{E}$
Kilowatts	$\frac{I \times E \times pf}{1000}$	$\frac{I \times E \times 2 \times pf}{1000}$	$\frac{I \times E \times 1.73 \times pf}{1000}$	$\frac{I \times E}{1000}$
Kilovolt-amps	$\frac{I \times E}{1000}$	$\frac{I \times E \times 2}{1000}$	$\frac{I \times E \times 1.73}{1000}$	Not applicable
Horsepower	$\frac{I \times E \times \% \text{ eff.} \times pf}{746}$	$\frac{I \times E \times 2 \times \% \text{ eff.} \times pf}{746}$	$\frac{I \times E \times 1.73 \times \% \text{ eff.} \times pf}{746}$	$\frac{I \times E \times \% \text{ eff.}}{746}$
Watts	$E \times I \times pf$	$I \times E \times 2 \times pf$	$I \times E \times 1.73 \times pf$	$E \times I$
Energy efficiency		$\frac{\text{Load horsepower} \times 746}{\text{Load input kVA} \times 1000}$		
Power factor (pf)	$\frac{\text{Power consumed}}{\text{Apparent power}}$ =	$\frac{W}{VA}$ or	$\frac{kW}{kVA}$ = cosØ	

Where: I = Amps, E = Volts, Hp = Horsepower, kVA = Kilovolt-amps, kW = Kilowatts, pf = Power factor, % eff. = Percent efficiency

FuseFinder fuse and fuse block cross reference

Eaton, the leader in circuit protection, power management and electrical safety offers an extensive selection of Bussmann series fuses and fuse blocks to meet your overcurrent protection needs.

If you need to find a replacement to another manufacturer's glass tube, low voltage branch and supplemental or high speed fuse, or fuse block or holder, use this quick cross reference FuseFinder to identify the Bussmann series replacement.

If you cannot find a product cross, more extensive listings are available online at Eaton.com/bussmannseries/FuseFinder.

Or email our Application Engineers at FuseTech@Eaton.com.

Fuse cross reference

Competitor	Bussmann series	Competitor	Bussmann series	Competitor	Bussmann series
0481(amp)	GMT-(amp)A	413(amp)	MDM-(amp)	ATMR(amp)	KTK-R(amp)
211(amp)	GDC-(amp)	414(amp)	ABS-(amp)	ATQ(amp)	FNQ-(amp)
212(amp)	GDB-(amp)	417(amp)	ABS-(amp)	ATQR(amp)	FNQ-R-(amp)
213(amp)	GDC-(amp)	418(amp)	TR/3216FF-(amp)	BBC(amp)	ABC-(amp)
215(amp)	S505-(amp)	429(amp)	3216FF(amp)	BDB(amp)	GDB-(amp)
216(amp)	GDA-(amp)	431(amp)	0603FA(amp)	BDC(amp)	GDC-(amp)
217(amp)	GDB-(amp)	5140(amp)	BAF-(amp)	BDL(amp)	MDL-(amp)
218(amp)	GDC-(amp)	5170(amp)	AGU-(amp)	BGC(amp)	AGC-(amp)
221(amp)	S505-V-(amp)	523(amp)	FNM-(amp)	BGX(amp)	AGX-(amp)
226(amp)	GDA-V-(amp)	5HF(amp)	GDA-(amp)	BLF(amp)	BAF-(amp)
227(amp)	GDB-V-(amp)	5HFP(amp)	GDA-V-(amp)	BLN(amp)	BAN-(amp)
228(amp)	GDC-V-(amp)	5HT(amp)	S505-(amp)A	BLS(amp)	BBS-(amp)
230(amp)	C515-(amp)	5MF(amp)	GMA-(amp)	BMA(amp)	GDA-(amp)
235(amp)	GMA-(amp)	5MFP(amp)	GMA-V-(amp)	CBO(amp) [4-160A]	HBO-(amp)
236(amp)	GMA-V-(amp)	5SF(amp)	GDB-(amp)	CCK(amp) [1-300A]	ACK-(amp)
238(amp)	GMD-V-(amp)	5ST(amp)	GDC-(amp)	CCL(amp) [30-100A]	ACL-(amp)
239(amp)	GMD-(amp)	6J(amp)X	KTK-(amp)	CCLB(amp) [20-250A]	KGJ-E-(amp)
257(amp)	ATC-(amp)	6R(amp)D	LPS-RK-(amp)SP	CCLW(amp) [1-300A]	KGJ-(amp)
297(amp) [auto fuse]	ATM-(amp)	702(amp)	HVJ-(amp)	CCMR [1-30A Only]	LP-CC(amp)
299(amp)	MAX-(amp)	703(amp)	HVL-(amp)	CDNC(amp)	CDN(amp)††
2AG220	C517-(amp)	81200(amp)ST	CBS-(amp)	CDSC(amp)	CDS(amp)†††
2AG230	C515-(amp)	A70P(amp)-1 or Type 1	FWP-(amp)A14F	CNL(amp)	ANL-(amp)
301(amp)	AGA-(amp)	A70P(amp)-4 or Type 4	FWP-(amp)A orB	CNN(amp)	ANN-(amp)
303(amp)	AGW-(amp)	A70Q(amp)-4 or Type 4	FWP-(amp)A or B	DCT [1-15A]	PV-(amp)A10F
307(amp)	SFE-(amp)	A70QS(amp)-14F	FWP-(amp)A14F	E(amp)FC	(amp)FC
311(amp)	AGC-(amp)	A70QS(amp)-22F	FWP-(amp)A22F	E(amp)FE	(amp)FE
312(amp)	AGC-(amp)	A70QS [35-200]-4	FWP-(amp)A or B	E(amp)FET	(amp)FET
313(amp)	MDL-(amp)	A70QS [225-400]-4 or 4K	FWP-(amp)A or B	E(amp)FM	(amp)FM
314(amp)	ABC-(amp)	A70QS [450-600]-4K	FWP-(amp)A or B	E(amp)FMM	(amp)FMM
315(amp)	MDL-V-(amp)	A70QS [700-800]-4	FWP-(amp)A or B	E(amp)LCT [6-20A]	(amp)LCT
318(amp)	AGC-V-(amp)	A50P(amp)-1	FWH-(amp)A14F	E(amp)LET [25-180A]	(amp)LET
322(amp)	GBB-(amp)	A50P(amp)-4	FWH-(amp)A or B	E(amp)LMMT [315-900A]	(amp)LMMT
323(amp)	MDA-(amp)	A50QS(amp)-4 or Type 4	FWH-(amp)A or B	E(amp)LMT [160-450A]	(amp)LMT
324(amp)	ABC-V-(amp)	A30QS(amp)-1 or Type 1	FWX-(amp)A14F	E100SF(amp) [20-30A]	FWJ-(amp)A14F
325(amp)	MDA-V-(amp)	A30QS [35-700]-4 or Type 4	FWX-(amp)A	E100S(amp) [40-2000A]	FWJ-(amp)
326(amp)	MDA-(amp)	A30QS [1000-1200]-128	FWX-(amp)AH	E15S(amp) [35-3000A]	FWA-(amp)A
334(amp)	GLD-(amp)	A15QS [1-30]-2	FWA-(amp)A10F	E15SF(amp) [5, 10, 15, 20, 25, 30A]	FWA-(amp)A10F
336(amp)	GBA-(amp)	A15QS [35-60]-1	FWA-(amp)A21F	E25S(amp) [1000-2500A]	FWX-(amp)AH
361(amp)	AGX-(amp)	A15QS [70-400]-4	FWA-(amp)B	E25S(amp) [35-800A]	FWX-(amp)A
362(amp)	AGX-(amp)	A2D(amp)R	LPN-RK(amp)SP	E25SFX(amp) [5-30A]	FWX-(amp)14F
3770(amp)	SL-(amp)	A2K(amp)	KTN-R(amp)	E50S(amp)	FWH-(amp)
3780(amp)	S-(amp)	A3T(amp)	JJN(amp)	E50SF(amp) [5-30A]	FWH-(amp)14F
3785(amp)	T-(amp)	A4BQ [225-600]	KRP-CL-(amp)	E70S(amp)	FWP-(amp)
3AB(amp)	ABC-(amp)	A4BQ [601-6000]	KRP-C-(amp)SP	ECK(amp) [1-300A]	ACK-(amp)
3ABP(amp)	AGC-V-(amp)	A4BT [601-4000]	KLU [601-4000]	ECL(amp) [30-100A]	ACL-(amp)
3AG(amp)	AGC-(amp)	A4BY(amp)	KLU(amp)	ECN(amp)	FRN-R-(amp)
3AG311(amp)	AGC-(amp)	A4J(amp)	JKS(amp)	ECNR(amp)	FRN-R-(amp)
3AG312(amp)	AGC-(amp)	A6D(amp)R	LPS-RK(amp)SP	ECS(amp)	FRS-R-(amp)
3AG313(amp)	MDL-(amp)	A6K(amp)	KTS-R(amp)	ECSR(amp)	FRS-R-(amp)
3AG315(amp)	MDL-V-(amp)	A6T(amp)	JJS(amp)	ELR(amp)	GLR-(amp)
3AG318(amp)	AGC-V-(amp)	AG(amp)	SC(amp)	ENLE(amp)	ANL-(amp)
3SB(amp)	MDL-(amp)	AJT(amp)	LPJ(amp)SP	ENNE(amp)	ANN-(amp)
3SBP(amp)	MDL-V-(amp)	AM10/(amp)	LP-CC-(amp)	ERN(amp)	REN-(amp)*
401(amp)	GMT-(amp)A	AOK(amp)	ALS-(amp)	ERS(amp)	RES-(amp)**
411(amp)	ABS-(amp)	ATDR(amp)	LP-CC-(amp)	ESA(amp)	S-(amp)
412(amp)	ABS-(amp)	ATM(amp)	KLM(amp)	FA(amp)	SA(amp)

* >60 A use FRN-R (250 V) ** >60 A use FRS-R (600 V) † >12 A use TL †† <10 A use FRN-R (600 V) ††† <10 A use FRS-R (600 V)

Fuse cross reference

Competitor fuse family	Bussmann series	Competitor fuse family	Bussmann series	Competitor fuse family	Bussmann series
FII(amp)	CGL-(amp)	KLH(amp) [225-600A]	FWH-(amp)A	MEN(amp)	FNM-(amp)
FIIC(amp)	CGL-(amp)	KLH(amp) [35-200A]	FWH-(amp)B	MEQ(amp)	FNQ-(amp)
FIIM(amp) [125-200A]	(amp)M14CB	KLK(amp)	KTK-(amp)	MJS(amp)	C515-(amp)
FIIM(amp) [80-100A]	(amp)L09CB	KLKR(amp)	KTK-R-(amp)	MOL(amp)	BAF-(amp)
FLA(amp)	FNA-(amp)	KLLU(amp)	KLU-(amp)	NCL(amp)	KTN-R-(amp)
FLM(amp)	FNM-(amp)	KLMR(amp)	LP-CC-(amp)	NCLR(amp)	KTN-R-(amp)
FLN(amp)	FRN-R-(amp)	KLNR(amp)	KTN-R-(amp)	NLN(amp)	NON-(amp)
FLNR(amp)	FRN-R-(amp)	KLPC(amp)	KRP-C-(amp)SP	NLS(amp)	NOS-(amp)
FLQ(amp)	FNQ-(amp)	KLSR(amp)	KTS-R-(amp)	OT(amp)	NON(amp)
FLS(amp)	FRS-R-(amp)	KLW(amp)	FWA-(amp)10F	OTM(amp)	BAF-(amp)
FLSR(amp)	FRS-R-(amp)	KON(amp)	NON-(amp)	OTS(amp)	NOS(amp)
GFN(amp)	FNA-(amp)	KOS(amp)	NOS-(amp)	RF(amp)	REN(amp)*
GGU(amp)	AGU(amp)	L(amp)TD	KRP-C-(amp)SP	RFS(amp)	RES(amp)**
GL10/(amp)	KTK-(amp)	L15S(amp) [1-30A]	FWA-(amp)A10F	RLN(amp)	REN-(amp)*
HCLR(amp)	KTK-R-(amp)	L15S(amp) [35-60A]	FWA-(amp)A21F	RLS(amp)	RES(amp)**
HCTR(amp)	FNQ-R-(amp)	L15S(amp) [70-400A]	FWA-(amp)A	SAO(amp)	SA-(amp)
HSJ(amp)	DFJ(amp)	L25S(amp) [1-30A]	FWX-(amp)A14F	SBS(amp)	BBS-(amp)
IDSR[6-60A Only]	FRS-R-(amp)ID	L50S(amp) [1-30A]	FWH-(amp)A14F	SCL(amp)	KTS-R-(amp)
J(amp)	JKS-(amp)	L70S(amp) [1-30A]	FWP-(amp)A14F	SCLR(amp)	KTS-R-(amp)
JDL(amp)	LPJ-(amp)SP	LCU(amp)	KTU-(amp)	SEC(amp)	SC-(amp)
JFL(amp)	JKS-(amp)	LEN(amp)	FRN-R-(amp)	SLC(amp)	SC-(amp)
JLLN(amp)	JJN-(amp)	LENRK(amp)	LPN-RK-(amp)SP	SLO(amp)	SL-(amp)
JLLS(amp)	JJS-(amp)	LES(amp)	FRS-R-(amp)	SOO(amp)	S-(amp)
JLS(amp)	JKS-(amp)	LESR(amp)	FRS-R-(amp)	TLO(amp)	TL-(amp)
JTD(amp)	LPJ-(amp)SP	LESRK(amp)	LPS-RK-(amp)SP	TOO(amp)	T-(amp)
KLA(amp) [5, 10, 15, 20, 25, 30A]	FWA-(amp)A10F	LGR(amp)	GLR-(amp)	TR(amp)	FRN-R-(amp)
KLB(amp) [1-30A]	FWX-(amp)A14F	LHR(amp)	HLR(amp)	TRM(amp)	FNM-(amp)
KLC(amp)	KAC-(amp)	LKU(amp)	KLU-(amp)	TRS(amp)	FRS-R(amp)
KLDR(amp)	FNQ-R-(amp)	LLNRK(amp)	LPN-RK-(amp)SP	WOO(amp)	W-(amp)
KLH(amp) [1-30A]	FWH-(amp)A14F	LLSRK(amp)	LPS-RK-(amp)SP		

* >60 A use FRN-R (250 V) ** >60 A use FRS-R (600 V) † >12 A use TL. †† <10 A use FRN-R (600 V) ††† <10 A use FRS-R (600 V)

Fuse block and holder cross reference

Competitor	Bussmann series	Competitor	Bussmann series	Competitor	Bussmann series
LFJ60030(X)/(X)ID	JM60030-(X)CR	6030(X)J	JM60030-(X)CR	(R)6J30A(X)S	JM60030-(X)CR
LFJ60060(X)/(X)ID	JM60060-(X)CR	6060(X)J	JM60060-(X)CR	(R)6J60A(X)B	JM60060-(X)CR
LFJ60100(X)/(X)ID	JM60100-(X)CR***	610(XX)J	JM60100-(X)CR***	R6J100A(X)B	JM60100-(X)CR***
LFJ60200(X)/(X)ID	JM60200-(X)CR***	620(XX)J	JM60200-(X)CR***	6J200A(X)BFBD	JM60200-(X)CR***
LFJ60400(X)/(X)ID	JM60400-(X)CR***	640(XX)J	JM60400-(X)CR***	6J400A(X)BFBD	JM60400-(X)CR***
LFJ60600(X)/(X)ID	JM60600-(X)CR***	66(XX)J	JM60600-(X)CR***	6J600A(X)BFBD	JM60600-(X)CR***
LFR25030(X)/(X)ID	RM25030-(X)CR	203(XX)	HM25030-(X)CR	R30A(X)(XX)	RM25030-(X)CR
LFR25060(X)/(X)ID	RM25060-(X)CR	206(XX)	HM25060-(X)CR	R60A(X)(XX)	RM25060-(X)CR
LFR25100(X)/(X)ID	RM25100-(X)CR***	210(XX)	HM25100-(X)CR***	R100A(X)B	RM25100-(X)CR***
LFR25200(X)/(X)ID	RM25200-(X)CR***	220(XX)	HM25200-(X)CR***	R200A(X)BE	RM25200-(X)CR***
LFR25400(X)/(X)ID	RM25400-(X)CR***	240(XX)	HM25400-(X)CR***	R400A(X)B	RM25400-(X)CR***
LFR25600(X)/(X)ID	RM25600-(X)CR***	26(XX)	HM25600-(X)CR***	R600A(X)B	RM25600-(X)CR***
LFR60030(X)/(X)ID	RM60030-(X)CR	603(XX)	HM60030-(X)CR	6R30A(X)(XX)	RM60030-(X)CR
LFR60060(X)/(X)ID	RM60060-(X)CR	606(XX)	HM60060-(X)CR	6R60A(X)(XX)	RM60060-(X)CR
LFR60100(X)/(X)ID	RM60100-(X)CR***	610(XX)	HM60100-(X)CR***	6R100A(X)B	RM60100-(X)CR***
LFR60200(X)/(X)ID	RM60200-(X)CR***	620(XX)	HM60200-(X)CR***	6R200A(X)BE	RM60200-(X)CR***
LFR60400(X)/(X)ID	RM60400-(X)CR***	640(XX)	HM60400-(X)CR***	6R400A(X)B	RM60400-(X)CR***
LFR60600(X)/(X)ID	RM60600-(X)CR***	66(XX)	HM60600-(X)CR***	6R600A(X)B	RM60600-(X)CR***
LFH25030(X)/(X)ID	HM25030-(X)CR	203(XX)R	RM25030-(X)CR	(R)F30A(X)(XX)	HM25030-(X)CR
LFH25060(X)/(X)ID	HM25060-(X)CR	206(XX)R	RM25060-(X)CR	(R)F60A(X)(XX)	HM25060-(X)CR
LFH25100(X)/(X)ID	HM25100-(X)CR***	210(XX)R	RM25100-(X)CR***	RF100A(X)B	HM25100-(X)CR***
LFH25200(X)/(X)ID	HM25200-(X)CR***	220(XX)R	RM25200-(X)CR***	F200A(X)BE	HM25200-(X)CR***
LFH25400(X)/(X)ID	HM25400-(X)CR***	240(XX)R	RM25400-(X)CR***	RF400A(X)B	HM25400-(X)CR***
LFH25600(X)/(X)ID	HM25600-(X)CR***	26(XX)R	RM25600-(X)CR***	F600A(X)B	HM25600-(X)CR***
LFH60030(X)/(X)ID	HM60030-(X)CR	603(XX)R	RM60030-(X)CR	(R)6F30A(X)(XX)	HM60030-(X)CR
LFH60060(X)/(X)ID	HM60060-(X)CR	606(XX)R	RM60060-(X)CR	(R)6F60A(X)(XX)	HM60060-(X)CR
LFH60100(X)/(X)ID	HM60100-(X)CR***	610(XX)R	RM60100-(X)CR***	R6F100A(X)B	HM60100-(X)CR***
LFH60200(X)/(X)ID	HM60200-(X)CR***	620(XX)R	RM60200-(X)CR***	6F200A(X)BE	HM60200-(X)CR***
LFH60400(X)/(X)ID	HM60400-(X)CR***	640(XX)R	RM60400-(X)CR***	R6F400A(X)B	HM60400-(X)CR***
LFH60600(X)/(X)ID	HM60600-(X)CR***	66(XX)R	RM60600-(X)CR***	6F600A(X)B	HM60600-(X)CR***
LFPSJ30(X)/(X)ID	CH30J(X)/(X)I	US3J(X)/(X)I	CH30J(X)/(X)I	6SJ30A(X)/(X)I	CH30J(X)/(X)I
LFPSJ60(X)/(X)ID	CH60J(X)/(X)I	US6J(X)/(X)I	CH60J(X)/(X)I	6SJ60A(X)/(X)I	CH60J(X)/(X)I
LPHV	CHPV	USPV	CHPV	6SC30A(X)-C/(X)I-C	CHCC(X)DU/(X)DIU
LPSC00(X)/(X)ID	CHCC(X)DU/(X)DIU	USCC(X)/(X)I	CHCC(X)DU/(X)DIU	6SM30A(X)-C/(X)I-C	CHM(X)DU/CHM(X)DIU
LPSM00(X)/(X)ID	CHM(X)DU/CHM(X)DIU	USM(X)/(X)I	CHM(X)DU/CHM(X)DIU		

*** Finger-safe covers are available for this block along with optional open fuse indication.

1. Some competitor blocks are adder blocks and/or have multiple terminal offerings for Cu/Al or Cu only conductors.
2. Wire ranges are not always the same. Please assure wire range is suitable for the application.
3. All blocks listed have a box lug for wire termination. Alternate connection types are available in the 30 and 60 amp range. If an alternate type is required, please see the appropriate Bussmann series product data sheet for catalog number and ordering information.

Catalog number index

For information on products not contained in this catalog, contact Customer Satisfaction, toll-free, at 855-287-7626 (855-BUSSMANN) between 7:00 a.m. — 6:00 p.m. Central time, M-F, or email BussCustSat@Eaton.com.

Catalog no.	Page
_CIF06	5-4
_CIF21	5-4
_CIH07	5-5
_CIK07	5-5
_CIL14	5-5
_CT	4-17
_D125	5-9
_D16	5-9
_D27	5-9
_D33	5-9
_EET	4-17
_ET	4-17
_FE	4-17
_FEE	4-17
_FM	4-19
_FMM	4-19
_H07C	5-6
_K07CR	5-6
_L09C	5-6
_L14C	5-6
_LCT	4-15
_LET	4-15
_LMMT	4-16
_LMT	4-16
_M09C	5-6
_M14C	5-6
_MMT	4-19
_MT	4-19
_NHG000B	5-10
_NHG000B-690	5-11
_NHG00B	5-10
_NHG00B-690	5-11
_NHG01B	5-10
_NHG02B	5-10
_NHG03B	5-10
_NHG0B	5-10
_NHG1B	5-10
_NHG1B-690	5-11
_NHG2B	5-10
_NHG2B-690	5-11
_NHG3B	5-10
_NHG3B-690	5-11
_NHG4B	5-10
_NHG4B-690	5-11
_NZ01	5-9
_NZ02	5-9
_P11C	5-6
_R11C	5-6
11675-_	9-17
11725-_	9-17
12ABCNA_	7-26
12CAV_	7-26
12TDLEJ	7-32
12THLEJ	7-32
12TKLEJ	7-32
12TXLEJ	7-32
14002-_	9-17
14004-_	9-17
15.5CAV_E	7-26
15.5CAVH_E	7-26
15087	14-10
15100-_	14-7
15188	10-6
15188J-2-J	10-6
155GXQSJ_E	7-21
15800-_	14-5
15BHLE-_E	7-18
15CLE-_E	7-15
15CLE-_E-D	7-15
15CLE-_M-C	7-15
15CLE-_M-D	7-15
15CLE-_M-E	7-15
15CLPT-_E	7-26
15CLPT-_M-A	7-29
15CLPT-_M-B	7-29
15HCL-_E	7-18
15HLE-_E	7-15
15HLE-_M-C	7-15
15HLE-_M-D	7-15
15HLE-_M-E	7-15
15KU_	7-33
15LHLE-_E	7-15
15NCLPT-_E-A	7-26
15NCLPT-_E-B	7-26
15SBR_	7-33
15TB_	7-33
15XAD_	7-33
160_	9-9, 15
162_	9-9, 13, 15
163_	9-9, 13, 15
164_	9-9
165_	9-9, 13, 15
17.5ABGNA_	7-26
17.5CAV_	7-26
17.5TDLSJ	7-32
17.5TDMEJ	7-32
17.5TFLSJ	7-32
17.5THMEJ	7-32
17.5TKMEJ	7-32
170H0069	4-78
170H023_	8-40
170H0235	4-78
170H0236	4-78, 6-5, 11
170H0237	4-78
170H0238	4-78, 6-5, 11
170H1007	4-76
170H1013	4-76
170H3003	4-77
170H3004	4-77
170H3005	4-77
170H3006	4-77
170M_	†
175GDMSJ_E	7-21
175GFMSJ_E	7-21
175GXMSJ_E	7-21
175GXQSJ_E	7-21
1A0065	7-3, 7, 11, 22, 23, 25, 36
1A1119-_	3-15
1A1120-_	3-15
1A1706-_	14-10
1A1837	7-26
1A1907-_	3-15
1A2294	8-47
1A3398-07-R	3-15
1A3399-_	3-14
1A3400-_	3-16
1A4533-_	3-15
1A4534-_	3-15
1A5018-_	3-14
1A5600	2-14
1A5601	3-14
1A5602	3-14
1A5778	2-14
1A5779	2-14
1A5780	2-14
1BS10_	4-14, 8-39
20BS	5-15
20LSC	5-15
24ABGNA_	7-26
24CAV_	7-26
24TDMEJ	7-32
24TFMEJ	7-32
24THMEJ	7-32
24TXMEJ	7-32
258GDQSJ_E	7-21
258GXQSJ_E	7-21
258GXZSJ_E	7-21
25CLPT-_E	7-26
25CLPT-_M-A	7-29
25KU_	7-33
25SBR_	7-33
25TB_	7-33
25XAD_	7-33
270303	7-20, 36
2778	2-2
2837	2-2
2838	2-2
2A066_	8-49, 51, 53
2A1910-_	15-4
2ACLS-_R	7-22
2BCLS-_R	7-22
2CLE-_E	7-3
2CLE-_M-C	7-3
2CLE-_M-D	7-3, 22
2CLE-_M-E	7-3, 22
2CLS-_R	7-22
2HCLS-_R	7-22
2NCLPT-_	7-26
3.6ABCNA_	7-26
3.6ABWNA_	7-26
3.6ADLSJ	7-32
3.6ADOSJ	7-32
3.6CAV_	7-26
3.6WDFHO	7-31
3.6WDLSJ	7-31
3.6WDOH6	7-31
3.6WDOSJ	7-32
3.6WFFHO	7-31
3.6WFLSJ	7-31
3.6WFOH6	7-31
3.6WFOSJ	7-32
3.6WJON6	7-31
3.6WKFHO	7-31
3.6WKLSJ	7-32
32BS	5-15
32LSCC	5-15
36ABGNA_	7-26
36CAV_	7-26
36TDQSJ	7-32
36TFQSJ	7-32
36TXQEJ	7-32
3723	8-14
3742	8-14
3743	8-14
3828-_	8-5
38CAV_E	7-26
38CAVH_E	7-26
38CLPT-_E	7-26
38CLPT-_M-A	7-29
38GFZSJ_E	7-21
4164	2-4
4164-FR	2-4
4393-_	8-5
4421	8-14
4515	8-14
4520-_	8-5
46KU_	7-33
46SBR_	7-33
46TB_	7-33
46XAD_	7-33
5.5ABWNA_E	7-26
5.5AMWNA_E	7-26
5.5CAV_E	7-26
5.5CAVH_E	7-26
5.5VFNHA	7-31
5.5VKNHA	7-31
5592-01	3-16
55GDMSJ_E	7-21
55GFMSJ_E	7-21
5674-_	3-16
5681-01	3-16
5682-_	3-16
5960-_	3-16
5ACLS-_R	7-23
5ACLS-30	7-23
5AHLE-_E	7-8
5BCLS-_R	7-23
5BCLS-30	7-23
5BHCL-_E	7-8
5BHLE-_E	7-8
5CLE-_E	7-5, 8
5CLE-_E-D	7-5
5CLE-_M-C	7-5
5CLE-_M-D	7-5, 23
5CLE-_M-E	7-5, 23
5CLPT-_E	7-26
5CLPT-_M-A	7-29
5CLS-_R	7-23
5CLS-30	7-23
5HCL-_E	7-8
5HCLS-_R	7-23
5HCLS-30	7-23
5HLE-_E	7-5
5HLE-_M-C	7-5
5HLE-_M-D	7-5, 23
5HLE-_M-E	7-5, 23
5LCLS-_R	7-23
5MCLS-_R-_A	7-23
5MCLS-_R-_B	7-23
5NCLPT-_E	7-26
5NCLPT-_E-A	7-26
5TPH	15-4
60/100BS	5-15
63/100LSC	5-15
64200	2-3
64300	2-3
68300	2-3
68600	2-3
7.2ABCNA_	7-26
7.2ABWNA_	7-26

† Due to the many sizes, AC and DC voltage ratings, amp ratings and standards associated with the 170M high speed fuse catalog number prefix, please see the high speed fuse section table of contents to locate your specific fuse.

Catalog number index

For information on products not contained in this catalog, contact Customer Satisfaction, toll-free, at 855-287-7626 (855-BUSSMANN) between 7:00 a.m. — 6:00 p.m. Central time, M-F, or email BussCustSat@Eaton.com.

Catalog no.	Page
7.2AMWNA_E	7-26
7.2CAV_	7-26
7.2TDLSJ	7-32
7.2TFLSJ	7-32
7.2WFMSJ	7-31
7.2WFNHO	7-31
7.2WKMSJ	7-31
7.2WKNHO	7-31
70_-_A	14-10
72_	14-10
72KU_	7-33
72SBR_	7-33
72TB_	7-33
72XAD_	7-33
7BCLS-_R	7-25
8ACLS-_R	7-25
8AHLE-_E	7-13
8BHLE-_E	7-13
8CLE-_E	7-11
8CLE-_M-C	7-11
8CLE-_M-D	7-5, 23
8CLE-_M-E	7-11
8CLPT-_E-A	7-26
8CLPT-_M-A	7-29
8CLPT-_M-B	7-29
8CLS-_R	7-25
8HCL-_E	7-13
8HLE-_E	7-11
8HLE-_M-C	7-11
8HLE-_M-D	7-5, 25
8HLE-_M-E	7-11
8NCLPT-_E	7-26
8NCLPT-_E-A	7-26
8NCLPT-_E-B	7-26
9078A67G04	"7-3, 7, 11, 22, 23, 25, 36
9435-1/2	8-42
9732	8-42
9838	8-48
9841	8-48
A	2-11
A3354710	7-3, 7, 11, 36
A3354730	7-3, 7, 11, 22, 23, 25, 36
A3354745	7-20, 36
AAO-_	5-7
ABC-_-R	3-9
ABC-V-_-R	3-9
AC-_	5-8
AD-_	5-8
AGA-_	3-7
AGC-_-R	3-9
AGC-V-_-R	3-9
AGW-_	3-8
AGX-_	3-8
AL-D	4-37
ANL-_	2-4
ANN-_	2-4
AT512	10-4
ATC-_	2-13
ATC-FHID	2-14
ATM-_	2-12
ATM-_LP	2-12
ATM-FHID	2-14
ATR-_	2-12
B	10-11, 13, 15
B221-_	12-6
B222-_	12-6
BAC0_	11-56, 58, 60, 62, 64, 67, 73, 75, 77, 82, 86, 88, 90
BAC1_	11-75, 77, 88
BAC-HOLDER2	11-56
BAF-_	2-5
BAO-_	5-7
BB1P100M_	8-10
BB3P100M_	8-10
BBS-_	2-7
BC-_	5-8
BCCMM603-3_	8-6
BCM603-_	8-6
BD-_	5-8
BG301_	8-15
BG302_	8-15
BG303_	8-15
BH-0_	4-14, 8-39
BH-1_	4-14, 8-39
BH-2_	4-14, 8-39
BH-3-_	4-14, 8-39
BK	8-42
BK	8-42
BK	8-43
BK	8-44
BMM603-_	8-6
BNQ21-_	10-8
BOOT-KCM	2-3
BOOT-KDM	2-3
BPVM-_	6-9
BQE	10-8
BQQ41-_	10-8
BRKT-ANGL	10-20
BRKT-FLT	10-20
BRKT-ND	10-20
BRKT-NDSCRW	10-20
BRKT-NDSCRW2	10-20
BRKT-NDSCRW3	10-20
BS	10-13, 15
BSPA_	13-6
BSPA-FLUSHPLT_	13-7
BSPD_	13-10
BSPD_DING_	13-28
BSPD48RJ45	13-27
BSPH2A_ _ _ _LVR	13-25
BSPM1A_ _ _ _LV(R)	13-23
BSPMA1_S2GR	13-15
BSPMA2_S3GR	13-17
BSPMA3_DLGR	13-19
BSPMA3_WYGR	13-19
BSPMA4_WYNGR	13-21
BVL50	6-5, 11, 8-40
C10G_	5-13
C10M_	5-14
C14G_	5-13
C14M_	5-14
C22G_	5-13
C22M_	5-14
C30BS	5-15
C30F	5-15
C30FBS	5-15
C515-_-R	3-2
C517-3-R	3-3
C518-_-R	3-2
C519-_-R	3-2
C520-_-R	3-2
C5268-_	4-14, 8-39
C60BS	5-15
C60F	5-15
C60FBS	5-15
C7021-_	10-9
CCP2-_-30CC	11-39
CCP2-_-30M	11-39
CCP2-_-CF	11-2, 5, 9
CCP2-1-DCC	11-39
CCP2-1-DCM	11-39
CCP2-AUX	11-19, 45
CCP2-AUX-100	11-19
CCP2-AUX-S	11-20
CCP2B-_-_CF	11-36
CCP2-CWK2	1-14, 11-10
CCP2-FLC1-_	11-17
CCP2-FLC2-_	11-17
CCP2-FLR1_	11-17
CCP2-FLR2_	11-17
CCP2-H4X-_	11-15, 44
CCP2-HEX	11-18
CCP2-L2-1	1-14, 11-10
CCP2-L2-1A	1-14, 11-10
CCP2-L4-1	1-14, 11-10
CCP2-L4-1A	1-14, 11-10
CCP2-L4B-3	1-14, 11-10
CCP2-L4B-3A	1-14, 11-10
CCP2-MW1-3	11-13, 43
CCP2-MW1-6	11-13
CCP2-MW2-3	1-14, 11-10
CCP2-MW2-3	1-14, 11-10
CCP2-MW2-3	11-14
CCP2-MW2-6	1-14, 11-10
CCP2-MW2-6	1-14, 11-10
CCP2-MW2-6	11-14
CCP2-MW6-6	11-14
CCP2-NFPA-_	11-16, 44
CCP2-PB_	11-18
CCP2-PB2	1-14, 11-10
CCP2-PB6	1-14, 11-10
CCP2-PLC-100	11-21
CCP2-PLC-IND	11-21, 46
CCP2R-_-_CF	11-5
CCP2R-_-30CC	11-39
CCP2R-_-30M	11-39
CCP2RL-_-_CF	11-5
CCP2RL-_-30CC	11-39
CCP2RL-_-30M	11-39
CCP2-RM_	11-18
CCP2S-_-_CF	11-5
CCP2S-_-30CC	11-39
CCP2S-_-30M	11-39
CCP2-SH_-_	11-16, 44
CCP2SL-_-_CF	11-5
CCP2SL-_-30CC	11-39
CCP2SL-_-30M	11-39
CCP2-SM	11-18
CCP2-TS_-3	11-18
CCP2-TS2-3	1-14, 11-10
CCP2-TS6-3	1-14, 11-10
CCPLP-_-20G-S	11-53
CCPLP-_-30CC-S	11-53
CCPLP-_-30M-S	11-53
CD-_	5-8
CDN-_	5-2
CDS-_	5-2
CEO-_	5-7
CFP-_	15-3
CGL-_	5-3
CH_J_	8-28
CH14_	8-16
CH14_DIU	4-37
CH14_DMSU-F	4-37
CH14_DNIU	4-37
CH14_DNU	4-37
CH14_DU	4-37
CH14-_PS	8-16
CH141DNXU	4-37
CH143DNMSU-F	4-37
CH14-CTP	8-16
CH14-IP20	4-37
CH14-L	4-37
CH14-MS1	4-37
CH14-MS3	4-37
CH14-P	4-37
CH22_	8-17
CH22_DIU	4-37
CH22_DMSU-F	4-37
CH22_DNIU	4-37
CH22_DNU	4-37
CH22_DU	4-37
CH22-_PS	8-17
CH221DNXU	4-37
CH223DNMSU-F	4-37
CH22-CTP	8-17
CH22-IP20	4-37
CH22-L	4-37
CH22-MS1	4-37
CH22-MS3	4-37
CHCC_D_U	8-8
CHCC1DI-48U	8-8
CHM_D_U	8-8
CHM_DIU	4-36
CHM_DN_U	8-8
CHM_DNU	4-36
CHM_DU	4-36
CHM1DNXU	4-36
CH-PLC2	8-11
CHPV_U	6-8, 8-8
CHPV14_	8-16
CHPV15L85	6-10
CHSF-_	4-3
CL1	4-21
CLE-_-C	7-3, 5, 11, 15
CLE-_-D	7-3, 5, 11, 15
CLE-_-E	7-3, 5, 11, 15
CLPT-_E-B	7-26
CLPT-_L	7-29
CM_CF	5-15
CPB160-_	9-9
CPB162-_	9-6, 9, 13
CPDB-_	9-6, 9, 13
CPDB165	9-9, 13
CVR_-CCM	8-6
CVR_-CCM-QC	8-6
CVR_-J-60030	8-32
CVR_-J-60060	8-18, 32, 34
CVR_-J-60100-M	8-32, 34
CVR_-J-60200-M	8-32, 34
CVR_-J-60400-M	8-32, 34
CVR_-J-60600-M	8-32
CVR_-RH-25030	8-19
CVR_-RH-25060	8-19, 25, 27
CVR_-RH-25100	8-20, 23

Catalog number index

For information on products not contained in this catalog, contact Customer Satisfaction, toll-free, at 855-287-7626 (855-BUSSMANN) between 7:00 a.m. — 6:00 p.m. Central time, M-F, or email BussCustSat@Eaton.com.

Catalog no.	Page
CVR_-RH-25200	8-20, 23
CVR_-RH-25400	8-20, 23
CVR_-RH-25600	8-20, 23
CVR_-RH-60030	8-19, 22
CVR_-RH-60060	8-19, 22, 25, 27
CVR_-RH-60100	8-20, 23
CVR_-RH-60200	8-20, 23
CVR_-RH-60400	8-20, 23
CVR_-RH-60600	8-20, 23
CVR-CCM	6-9, 8-6
CVRI-CCM	6-9, 8-6
DD-_	5-8
DD1-J	10-16
DD2HB-J	10-16
DD2-J	10-16
DD3-J	10-16
DEO-_	5-7
DFJ-_	4-4
DIR-0_	11-56, 58, 60, 62, 64, 66, 69, 73, 75, 77, 81
DOOR-508	11-81
DRA-1	15-4
DRL35MM_	10-20
EC-250	4-21
EC-600	4-21
ECAP1P	8-10
ED-_	5-8
EF-_	5-8
EFS-_	5-8
ER1-100J3PB	11-85
ER1-100N3PB	11-87
ER1-1200N3PB	11-87
ER1-16N_PB	11-89
ER1-200J3PB	11-85
ER1-200N3PB	11-87
ER12-100J3PB	11-85
ER12-100N3PB	11-87
ER12-1200N3PB	11-87
ER12-16N_PB	11-89
ER12-200J3PB	11-85
ER12-200N3PB	11-87
ER12-25N_PB	11-89
ER12-30J3PB	11-85
ER12-30N3PB	11-87
ER12-400J3PB	11-85
ER12-400N3PB	11-87
ER12-40N_PB	11-89
ER1-25N_PB	11-89
ER12-600J3PB	11-85
ER12-600N3PB	11-87
ER12-60J3PB	11-85
ER12-60N3PB	11-87
ER12-63N_PB	11-89
ER12-800L3PB	11-85
ER12-800N3PB	11-87
ER12-80N_PB	11-89
ER1-30J3PB	11-85
ER1-30N3PB	11-87
ER1-400J3PB	11-85
ER1-400N3PB	11-87
ER1-40N_PB	11-89
ER1-600J3PB	11-85
ER1-600N3PB	11-87
ER1-60J3PB	11-85
ER1-60N3PB	11-87
ER1-63N_PB	11-89
ER1-800L3PB	11-85
ER1-800N3PB	11-87
ER1-80N_PB	11-89
ER3R-100J3PB	11-85
ER3R-100N3PB	11-87
ER3R-1200N3PB	11-87
ER3R-16N_PB	11-89
ER3R-200J3PB	11-85
ER3R-200N3PB	11-87
ER3R-25N_PB	11-89
ER3R-30J3PB	11-85
ER3R-30N3PB	11-87
ER3R-400J3PB	11-85
ER3R-400N3PB	11-87
ER3R-40N_PB	11-89
ER3R-600J3PB	11-85
ER3R-600N3PB	11-87
ER3R-60J3PB	11-85
ER3R-60N3PB	11-87
ER3R-63N_PB	11-89
ER3R-800L3PB	11-85
ER3R-800N3PB	11-87
ER3R-80N_PB	11-89
ER4-100J3PB	11-85
ER4-100N3PB	11-87
ER4-1200N3PB	11-87
ER4-16N_PB	11-89
ER4-200J3PB	11-85
ER4-200N3PB	11-87
ER4-25N_PB	11-89
ER4-30J3PB	11-85
ER4-30N3PB	11-87
ER4-400J3PB	11-85
ER4-400N3PB	11-87
ER4-40N_PB	11-89
ER4-600J3PB	11-85
ER4-600N3PB	11-87
ER4-60J3PB	11-85
ER4-60N3PB	11-87
ER4-63N_PB	11-89
ER4-800L3PB	11-85
ER4-800N3PB	11-87
ER4-80N_PB	11-89
ER4P-100J3PB	11-85
ER4P-100N3PB	11-87
ER4P-16N_PB	11-89
ER4P-200J3PB	11-85
ER4P-200N3PB	11-87
ER4P-25N_PB	11-89
ER4P-30J3PB	11-85
ER4P-30N3PB	11-87
ER4P-400J3PB	11-85
ER4P-400N3PB	11-87
ER4P-40N_PB	11-89
ER4P-600J3PB	11-85
ER4P-600N3PB	11-87
ER4P-60J3PB	11-85
ER4P-60N3PB	11-87
ER4P-63N_PB	11-89
ER4P-800L3PB	11-85
ER4P-800N3PB	11-87
ER4P-80N_PB	11-89
ER4X-100J3PB	11-85
ER4X-100N3PB	11-87
ER4X-1200N3PB	11-87
ER4X-16N_PB	11-89
ER4X-200J3PB	11-85
ER4X-200N3PB	11-87
ER4X-25N_PB	11-89
ER4X-30J3PB	11-85
ER4X-30N3PB	11-87
ER4X-400J3PB	11-85
ER4X-400N3PB	11-87
ER4X-40N_PB	11-89
ER4X-600J3PB	11-85
ER4X-600N3PB	11-87
ER4X-60J3PB	11-85
ER4X-60N3PB	11-87
ER4X-63N_PB	11-89
ER4X-800L3PB	11-85
ER4X-800N3PB	11-87
ER4X-80N_PB	11-89
ESD-_	5-7
FBI	3-13
FBM	3-13
FCF_RN	1-10
FEH	5-12, 6-11, 8-40
FEH1500	6-10
FF-_	5-8
FG-_	5-8
FL11H_	7-34
FL11K_	7-34
FL11T_	7-34
FL12K_	7-34
FL3K_	7-34
FL3T_	7-34
FLC-	11-58, 60, 62, 64, 66
FLH_	11-58, 60, 62, 64, 66
FLMC	11-58, 60, 62, 64, 66
FLMR	11-58, 60, 62, 64, 66
FNA-_	2-9
FNM-_	2-6
FNQ-_	2-7
FNQ-R-_	1-6
FP-_	15-3
FRN-R-_	1-29
FRN-R-_ID	1-29
FRS-R-_	1-29
FRS-R-_ID	1-29
FSCVR	8-10
FT-_	15-3
FWA-_A	4-6
FWA-_A10F	4-22
FWA-_A21F	4-22
FWA-_AH	4-5
FWA-_B	4-6
FWC-_A10F	4-26
FWH-_A	4-8
FWH-_A14F	4-25
FWH-_A6F	4-24
FWH-_B	4-8
FWH5-_A6F	4-24
FWJ-_A	4-13
FWJ-_A14F	4-33
FWK-_20F	4-32
FWK-_A25F	4-32
FWL-_A20F	4-34
FWL-_A20FI	4-34
FWP-_A	4-11
FWP-_A14F	4-28
FWP-_A14FI	4-28
FWP-_A22F	4-30
FWP-_A22FI	4-30
FWP-_B	4-11
FWP-_G10F	4-27
FWP-_G14F	4-29
FWP-_G14FI	4-29
FWP-_G22F	4-31
FWP-_G22FI	4-31
FWS-_A20F	4-35
FWS-_A20FI	4-35
FWX-__AH	4-7
FWX-_A	4-7
FWX-_A14F	4-23
G30060-_	8-15
GBA-_	2-8
GBB-_-R	3-10
GBB-V-_-R	3-10
GDA-_	3-4
GDB-_	3-3
GDC-_	3-5
GF-_	5-8
GG-_	5-8
GH-_	5-8
GLD-_	2-8
GLP	5-15
GLQ-_	2-10
GLR-_	2-11
GMA-_-R	3-6
GMA-V-_-R	3-6
GMC-_-R	3-6
GMC-V-_-R	3-6
GMD-_-R	3-7
GMD-V-_-R	3-7
GMF-_	2-11
GMQ-_	2-10
GMT-_A	14-11
GMT-A	14-11
GND-_-_	11-82
GRF-_	2-11
H12-03_	11-62, 64, 66
H12-05_	11-56, 58, 60
H12X-03_	11-75
H15-H-1	3-12
H15-V-1	3-12
H4X-01_	11-73, 81
H4X-02_	11-81
H4X-03_	11-73, 81
H4X-04_	11-56
H4X-05_	11-56, 58, 60
H4X-06_	62, 64, 66, 75
H4X-07_	11-69, 77
H4X-08_	11-77
H79-_	11-56, 58, 60, 64, 67, 69
HBH-I	3-13
HBH-M	3-13
HBV-I	3-13
HBV-M	3-13
HBW-I	3-13
HBW-M	3-13
HCL-NL-1	7-8, 13, 18
HEB-_	8-51
HEC-_	8-49
HEG-_	8-49
HEH-_	8-49
HEJ-_	8-49
HET	8-49, 51, 53
HEX-_	8-53
HEY-_	8-53

Catalog number index

For information on products not contained in this catalog, contact Customer Satisfaction, toll-free, at 855-287-7626 (855-BUSSMANN) between 7:00 a.m. — 6:00 p.m. Central time, M-F, or email BussCustSat@Eaton.com.

Catalog no.	Page
HEZ-_	8-52
HFA-_	8-46
HFB-_	8-47
HH_	8-48
HH2	2-14
HHB-_	8-47
HHC	2-14
HHD	2-14
HHF	2-14
HHG	2-14
HHL	2-14
HHM	2-14
HHR	2-14
HHS	2-14
HHT	8-46
HHU	2-14
HHV	2-14
HHX	2-14
HJL	8-42
HK_	8-42
HKP-_	8-42
HLD-_	8-43
HLQ-_	2-10
HLR	2-11
HLR-2A	2-11
HLS_	14-11
HLT_	14-11
HM_	8-48
HM25030-_	8-19
HM25060-_	8-19
HM25060-_MW_	8-25
HM25100-_	8-20
HM25200-_	8-20
HM25400-_	8-20
HM25600-_	8-20
HM60030-_	8-19
HM60060-_	8-19
HM60060-_MW_	8-25
HM60100-_	8-20
HM60200-_	8-20
HM60400-_	8-20
HM60600-_	8-20
HPC-D	8-43
HPD	8-44
HPF-_	8-43
HPG-_	8-44
HPM-_	8-44
HPS-_	8-45
HPS2	8-45
HPV-D15V-4A	6-4
HPV-DV-_A	6-4
HR_	8-48
HR60060-_MW_	8-27
HRK-R	8-48
HTB-_-	8-41
HTC-140M	3-14
HTC-150M	3-14
HTC-15M	3-14
HTC-200M	3-14
HTC-210M	3-14
HTC-60M	3-12
HVA_	7-30
HVB_	7-30
HVJ_	7-30
HVL_	7-30
HVR	7-30
HVT_	7-30
HVU_	7-30
HVW_	7-30
HVX_	7-30
J101	10-11
J-13	15-2
J15188	10-6
J-16	15-2
J201	10-13
J-21	15-2
J-26	15-2
J301	10-15
J-41	15-2
J-42	15-2
J-62	15-2
J-63	15-2
J-64	15-2
JCH-_R	7-22
JCK-_R	7-22
JCK-A-_R	7-22
JCK-B-_R	7-22
JCL-_R	7-23
JCL-A-_R	7-23
JCL-B-_R	7-23
JCW-_	7-26
JCX-_E	7-3
JCY-_E	7-5
JF1	8-11
JJN-_	1-31
JJS-_	1-31
JKS-_	1-20
JKS-_-700	5-11
JM60030-_	8-32
JM60030-_MW_	8-34
JM60060-_	8-32
JM60060-_MW_	8-34
JM60100-_	8-32
JM60100-_MW_	8-34
JM60200-_	8-32
JM60200-_MW_	8-34
JM60400-_	8-32
JM60400-_MW_	8-34
JM60600-_	8-32
JM70100-_	8-18
JM70100-_CR	4-36
JM70100-_MW14	8-18
JN1	10-2, 3, 6
JN2	10-4
JN3	10-4, 6, 7
JN4	10-2, 7
JN512	10-4
JNDN3	10-2
JNSE3	10-5
JNSS3	10-5
JP60030-3_	8-30
JT60030	8-29
JT60060	8-29
JTN60030	8-29
JTN60060	8-29
JU12	10-19
JV-L	8-16, 17
KAC-_	4-9
KAD	10-7
KAZ	2-9
KBC-_	4-10
KCA	2-3
KCB	2-3
KCC	2-3
KCD	2-3
KCE	2-3
KCF	2-3
KCH	2-3
KCJ	2-3
KCM	2-3
KCR	2-3
KCS	2-3
KCV	2-3
KCY	2-3
KCZ	2-3
KDA	2-3
KDB	2-3
KDC	2-3
KDD	2-3
KDE	2-3
KDF	2-3
KDH	2-3
KDJ	2-3
KDM	2-3
KDP	2-3
KDR	2-3
KDT	2-3
KDU	2-3
KDY	2-3
KEW	2-3
KEX	2-3
KFH-A	2-3
KFM	2-3
KFT	2-3
KFZ	2-3
KIG	2-3
KIT-6POLE	11-82
KLM-_	2-6
KLU-_	1-24
KPF	2-3
KQO	2-3
KQT	2-3
KQV	2-3
KRP-C-_SP	1-22
KRP-CL-_	1-23
KT_	10-7
KTK-_	2-5
KTK-R-_	1-7
KTN-R-_	1-27
KTS-R-_	1-27
KTU-_	1-23
KU_	10-19
LP-CC-_	1-5
LPJ-_SP	1-19
LPJ-_SPI	1-19
LPN-RK-_SP	1-24
LPN-RK-_SPI	1-24
LPS-RK-_SP	1-24
LPS-RK-_SPI	1-24
LUG_-_	11-66, 69, 75, 77
MAI	4-21
MAX-_	2-13
MAX-FHID	2-14
MB-_	1-35
MBI	4-21
MC-250	4-21
MC-600	4-21
MDA-_-R	3-11
MDA-V-_-R	3-11
MDL-_-R	3-10
MDL-V-_-R	3-10
MDQ--R	3-11
MDQ-V-_-R	3-11
MIC-_	2-8
MIS-_	2-9
MT12-1-2	10-2, 3, 4, 5, 6, 7
MTC6	10-2, 7
MTMU_	10-19
MV055F_	7-5
MV155F_	7-15
N512-_	10-4
NC3-_	10-5
NDN_	10-2, 3
NDNF1-WH	8-11
NFT_	10-4
NFTA	10-20
NITD-_	5-7
NNB	15-3
NNB-R	15-3
NNC	15-3
NO.1	15-4
NO.2	15-4
NO.213	15-2
NO.213-R	15-2
NO.216	15-2
NO.216-R	15-2
NO.226	15-2
NO.226-R	15-2
NO.242-R	15-2
NO.2621	15-2
NO.2621-R	15-2
NO.263	15-2
NO.263-R	15-2
NO.2641	15-2
NO.2641-R	15-2
NO.2642	15-2
NO.2661	15-2
NO.2661-R	15-2
NO.2662	15-2
NO.2662-R	15-2
NO.2664	15-2
NO.2664-R	15-2
NO.4	15-4
NO.5	15-4
NO.6	15-4
NO.616	15-2
NO.616-R	15-2
NO.626	15-2
NO.626-R	15-2
NO.642-R	15-2
NO.663	15-2
NO.663-R	15-2
NO.7	15-4
NO.8	15-4
NON-_	1-21
NOS-_	1-21
NRA	10-20
NSD-_	5-7
NSE3-_	10-5
NSS3-_	10-5
NTN-R-_	15-3
NTRL-_-_	11-82
NTS-R-_	15-3
NUC	10-19
NUE	10-19

Catalog number index

For information on products not contained in this catalog, contact Customer Satisfaction, toll-free, at 855-287-7626 (855-BUSSMANN) between 7:00 a.m. — 6:00 p.m. Central time, M-F, or email BussCustSat@Eaton.com.

Catalog no.	Page
NUM_	10-19
OJ_	10-11, 13, 15, 18
OPM-1038_	8-12
OPM-NG-S_	8-13
OSD-_	5-7
P	10-13
P-_	1-34
PCT	14-11
PDB_	9-6
PDBFS_	9-3
PF1-_	8-11, 15
PLU_	10-6
PMP-_	12-5
POLE-_	11-82, 90
POLE98-_	11-73
PON-_	5-2
PS_	12-5
PSU1-_	10-7
PTFB-2500-JCD	7-26
PV-_A-01XL	6-7
PV-_A-01XL-15	6-7
PV-_A-01XL-B	6-7
PV-_A-01XL-B-15	6-7
PV-_A10F85L	6-6
PV-_A14F	6-4
PV-_A-1XL	6-7
PV-_A-1XL-15	6-7
PV-_A-1XL-B	6-7
PV-_A-1XL-B-15	6-7
PV-_A-2XL	6-7
PV-_A-2XL-15	6-7
PV-_A-2XL-B	6-7
PV-_A-2XL-B-15	6-7
PV-_A-3L	6-7
PV-_A-3L-15	6-7
PV-_A-3L-B	6-7
PV-_A-3L-B-15	6-7
PV-_ANH1	6-5
PV-_ANH1-B	6-5
PV-_ANH2	6-5
PV-_ANH2-B	6-5
PV-_ANH3	6-5
PV-_ANH3-B	6-5
PV15M-4A-CT	6-6
PV-1A10-1P	6-3
PV-1A10-2P	6-3
PV-1A10F	6-3
PV-1A10F-CT	6-3
PV-1A10-T	6-3
PVM-_	6-2
PVS-R-_	6-2
PWR1PLP	8-10
PWR35MM	8-10
PWR50MM	8-10
QC_	10-11, 13, 15
QC_-J	10-11, 13, 15
QSCP	12-2
RD1000-3	11-71, 72
RD1000-4	11-71, 72
RD100-3	11-71, 72
RD100-3-SCCR	11-71, 72
RD1200-3	11-71, 72
RD1200-4	11-71, 72
RD16-3-508	11-79
RD200-3	11-71, 72
RD200-4	11-71, 72
RD25-3-508	11-79
RD30-3	11-71, 72
RD400-3	11-71, 72
RD400-4	11-71, 72
RD40-3-508	11-79
RD600-3	11-71, 72
RD600-4	11-71, 72
RD60-3	11-71, 72
RD63-3-508	11-79
RD800-3	11-71, 72
RD800-4	11-71, 72
RD80-3-508	11-79
RDF100J-2	11-55
RDF100J-3	11-55
RDF100J-4	11-55
RDF200J-2	11-55
RDF200J-3	11-55
RDF200J-4	11-55
RDF30CC-3	11-55
RDF30CC-3N	11-55
RDF30J-2	11-55
RDF30J-3	11-55
RDF30J-3-COMP	11-55
RDF30J-3N-COMP	11-55
RDF30J-4	11-55
RDF400J-2	11-55
RDF400J-3	11-55
RDF400J-4	11-55
RDF600J-2	11-55
RDF600J-3	11-55
RDF600J-4	11-55
RDF60J-2	11-55
RDF60J-2-COMP	11-55
RDF60J-3	11-55
RDF60J-3-COMP	11-55
RDF60J-4	11-55
RDF60J-4-COMP	11-55
RDF800L-2	11-55
RDF800L-3	11-55
RDF800L-4	11-55
RM25030-_	8-22
RM25060-_	8-22
RM25060-_MW_	8-27
RM25100-_	8-23
RM25200-_	8-23
RM25400-_	8-23
RM25600-_	8-23
RM60030-_	8-22
RM60060-_	8-22
RM60100-_	8-23
RM60200-_	8-23
RM60400-_	8-23
RM60600-_	8-23
RS_	5-15
S-_	1-34
S500-_-R	3-3
S500-V-_-R	3-3
S501-_-R	3-4
S501-V-_-R	3-4
S505-_-R	3-4
S505H-_-R	3-5
S505H-V-_-R	3-5
S505SC-_-R	3-4
S505SCH-_-R	3-5
S506-_-R	3-5
S506-V-_-R	3-5
S-8001-_	8-4
S-8002-_	8-4
S-8101-_	8-4
S-8102-_	8-4
S-8201-_	8-4
S-8202-_	8-4
S-8203-_	8-4
S-8301-_	8-4
SA-_	1-35
SAMI-_	15-2
SB1XL-S	6-10
SB2XL-S	6-10
SB3L-S	6-10
SC-_	1-18
SCY	1-36
SD_-PB	6-11
SD_-SK	6-11
SD00-D	5-12, 8-40
SD00-PB	5-12, 8-40
SD00-SK	5-12
SD12-PB	5-12, 8-40
SD12-SK	5-12, 8-40
SD1-D	5-12, 8-40
SD1-D-PV	6-11
SD2-D	5-12, 8-40
SD2-D-PV	6-11
SD3-D	5-12, 8-40
SD3-D-PV	6-11
SD3-PB	5-12, 8-40
SD3-SK	5-12, 8-40
SD4-D	8-40
SD4-S	5-12
SD4-S1600	8-40
SDL-_	5-12, 6-11, 8-40
SFC-_	15-4
SH1-_	11-56
SH2-_	11-56
SH3-_	11-73, 81
SH4-_	11-73, 81
SH5-_	11-58, 60, 62, 64, 66
SH6-_	11-77
SH7-_	11-69
SH-GUIDE_	11-73, 75, 77, 81
SL-_	1-33
SOU	1-36
SOW	1-36
SOX	1-36
SOY	1-36
SOY-B	1-36
SP	10-11, 13, 15
SPP40SP_	13-4
SRU	1-36
SRW	1-36
SRX	1-36
SRY	1-36
SS	10-13
SSD-_	5-7
SSN	1-36
SSU	1-36
SSW	1-36
SSY	1-36
SSY-RL	1-36
ST	10-13, 15
STD-_	5-7
STY	1-36
T-_	1-34
T30030-_	8-35
T30060-_	8-35
T30100-_	8-35
T30200-_	8-35
T30400-_	8-35
T30600-_	8-35
T60030-_	8-37
T60060-_	8-37
T60100-_	8-37
T60200-_	8-37
T60400-_	8-37
T60600-_	8-37
TB100-_	10-10
TB200-_	10-12
TB300-_	10-14
TB345-_	10-14
TB400	10-18
TC-_	1-34
TCF_	1-8
TCF_RN	1-8
TCFH_N	1-12
TCFH_NW	1-12
TD00-D	5-12, 8-40
TD00-IP20	5-12
TD1-D	5-12, 8-40
TD1-D-PV	6-11
TD1-IP20	5-12
TD2-D	5-12, 8-40
TD2-D-PV	6-11
TD2-IP20	5-12
TD3-D	5-12, 8-40
TD3-D-PV	6-11
TD3-IP20	5-12
TI_	4-21
TL-_	1-33
TP158HC_	14-6
TP15900-_	14-4
TP15914_	14-4
TPA-_	14-5
TPA-B-_	14-5
TPC-_	14-2
TPCDS-_	14-2
TPCDS-D-_	14-2
TPHCS_-_	14-7
TPL-_	14-8
TPM-_	14-3
TPMDS-_	14-3
TPN-_	14-9
TPS-_	14-6
TPS-_L	14-6
TPS-_V	14-6
TPSFH-_	15-4
TSH_-_B	11-75, 88
TSH_-_T	11-75, 88
TSH_-_TB	11-67, 69, 73, 75, 77, 82, 86, 88, 90
UHA	2-3
UHJ-M	2-3
UHJ-T	2-3
UHJ-W	2-3
W-_	1-33
WCF_RN	1-11
W-DUMMY	1-33
X_	10-16, 17