The protection you rely on

Our complete line of Bussmann series surge protective solutions helps provide power that's free from damaging surges.

Contents

Description	Section page
Selecting Type 1 SPDs	**2-3**
Type 1 SPDs	
SurgePOD PRO Type 1, NEMA 4X	4-5
BSPA, Type 1 and 2, NEMA 4X	6-9
BSPD high capacity Type 1 and 2, NEMA 1 and 4X	10-14
UL DIN-Rail high SCCR Type 1 SPDs	
1-pole, BSPM_S2G	15-16
2-pole, BSPM_S3G	17-18
3-pole, BSPM_WYG/DLG	19-20
4-pole, BSPM_WYNG/HLG	21-22
UL DIN-Rail power and control voltage Type 4 SPDs	
1-pole, Type 4 power BSPM_LV	23-24
2-pole, Type 4 voltage BSPH2A_LV	25-26
UL 497B DIN-Rail data signal SPDs	
RJ45/Ethernet	27
Universal 4 wire	28-29

Selecting a Type 1 SPD

Electrical systems and connections

Step 1: Review the following system diagrams that show the SPD connection points for the Bussmann series SPD models that may be applied.

Step 2: Locate the system diagram that matches your application, note the applicable SPD model numbers and then proceed to the product pages for their details.

Understanding the following will help assure that the correct surge protective device is specified:

- Typical North American electrical systems include single-phase, split-phase, Delta and Wye.
- Selecting the wrong SPD generally arises from misunderstanding the nominal system voltage, ground and neutral connections.
- General convention has it that a "ground" wire is not counted as a wire in the system description (e.g., 3 wire, 4 wire, etc.), but it is counted as a connection point if the SPD has a ground wire.
- Selecting a voltage rating for Wye systems must be based upon its nominal system voltage rating and not on the leg-to-leg voltages.
- Bonded N-G configurations do not require protection at the service entrance transformer, but protection is suggested in downstream bonded N-G systems if the length of conductor making the bond is greater than 10 feet (3m).

BSPD high capacity

BSPA

SurgePOD PRO

Two wire single-phase - 2 connection points

Application: Sub-panel or feeder panel

Volts: 120, 240 (L-N)

Note: Must be installed within 10 feet (3m) of a bonded neutral ground connection per IEEE C62.41-1991.

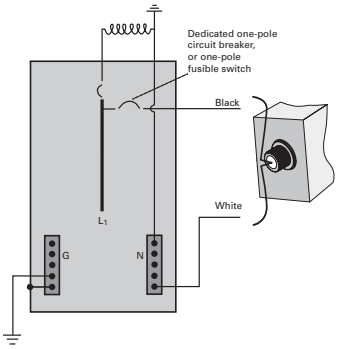

SPD catalog numbers:

- BSPA
  - Specify from build-a-code catalog number system
- SurgePOD™ PRO
  - SPP40SP1120SN

Three wire split-phase/two-pole - 3 connection points

Application: Service entrance panel

Volts: 120, 240 (L-N)

Note: Installation for where the SPD is greater than 10 feet (3m) from a bonded neutral-ground connection.

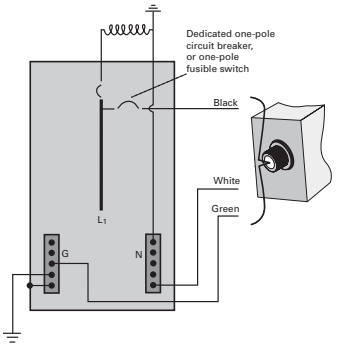

SPD catalog numbers:

- BSPA
  - Specify from build-a-code catalog number system

Three wire split-phase/two-pole - 3 connection points

Application: Sub-panel or feeder panel

Volts: 120, 240 (L-N), 240, 480 (L1-L2)

Note: Installation at or less than 10 feet (3m) from the transformer and within 10 feet (3m) of a bonded-neutral ground connection.

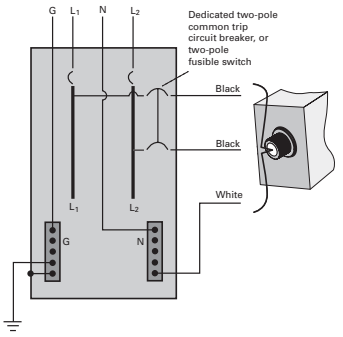

SPD catalog numbers:

- BSPA
  - Specify from build-a-code catalog number system
- SurgePOD PRO
  - SPP40SP2240PN

Three wire split-phase/two-pole plus ground - 4 connection points

Application: Service entrance equipment

Volts: 120, 240 (L-N), 240 (L1-L2)

Note: Installation where greater than 10 feet (3m) of a bonded-neutral ground connection.

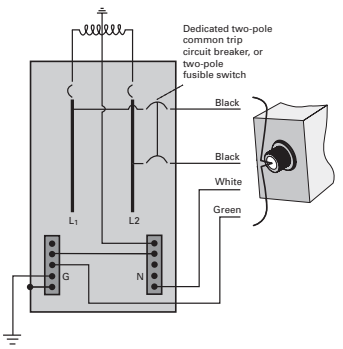

SPD catalog numbers:

- BSPA
  - Specify from build-a-code catalog number system

Three wire split-phase/two-pole plus ground - 4 connection points

Application: Sub-panel or feeder panel

Volts: 120, 240 (L-N), 240 (L1-L2)

Note: For installation greater than 10 feet (3m) of a bonded-neutral ground connection.

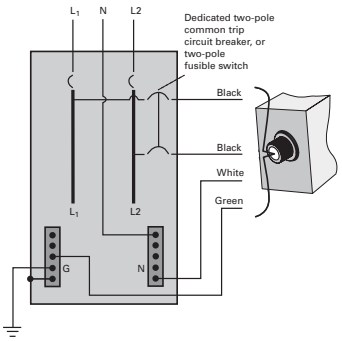

SPD catalog numbers:

- BSPA
  - Specify from build-a-code catalog number system

Three wire Delta plus ground - 4 connection points

Application: Service entrance equipment, sub-panel or feeder panel

Volts: 240, 480, 600 (L-L)

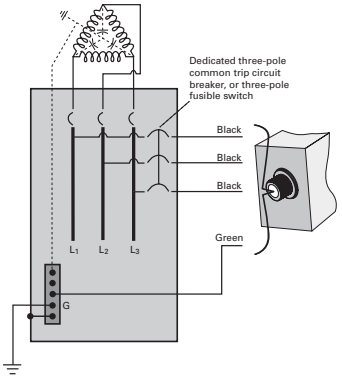

SPD catalog numbers:

- BSPA
  - Specify from build-a-code catalog number system
- BSPD
  - Specify from build-a-code catalog number system

Three wire Wye plus ground - 4 connection points

Application: Sub-panel or feeder panel

Volts: 208, 480, 600 (L-L)

Note: A common MCC configuration for pumping and water/waste water treatment.

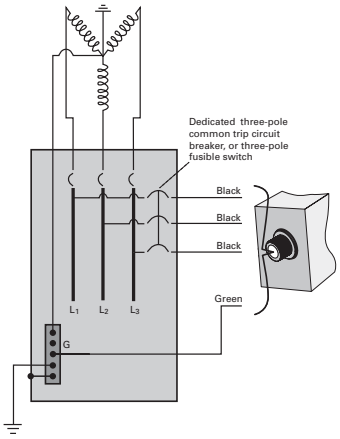

SPD catalog numbers:

- BSPA
  - Specify from build-a-code catalog number system
- SurgePOD PRO
  - SPP40SP3208WYG
  - SPP4SP3480WYG

Four wire Wye plus ground - 5 connection points

Application: Service entrance equipment

Volts: 120, 127, 277, 347 (L-N), 208, 220, 480, 600 (L-L)

Note: Common system configuration with Neutral pulled into facility and bonded to ground.

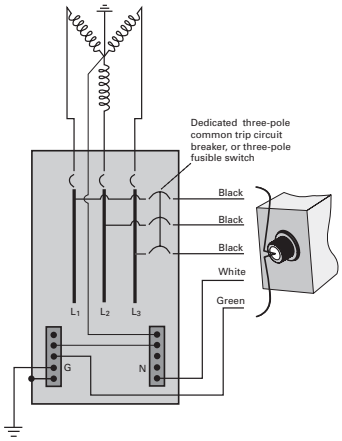

SPD catalog numbers:

- BSPA
  - Specify from build-a-code catalog number system
- BSPD
  - Specify from build-a-code catalog number system

Four wire Wye plus ground - 5 connection points

Application: Sub-panel or feeder panel

Volts: 120, 127, 277, 347 (L-N), 208, 220, 480, 600 (L-L)

Note: Common system configuration with Neutral pulled into facility and bonded to ground.

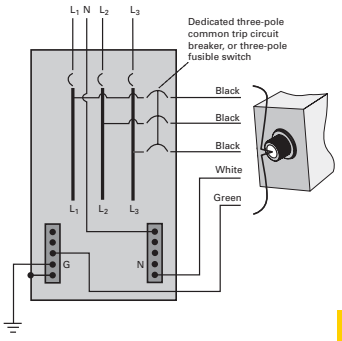

SPD catalog numbers:

- BSPA
  - Specify from build-a-code catalog number system
- BSPD
  - Specify from build-a-code catalog number system

SurgePOD™ PRO for UL 1449 4th Edition Listed loadside and lineside protection

The Bussmann series SurgePOD PRO is a Type 1 UL Listed 1449 4th Edition surge protective device suitable for installation on both the loadside or lineside of the service entrance overcurrent protective device and is well suited for light commercial and residential applications.

Available in popular voltage and system specific versions to match common residential and light commercial electrical system and equipment requirements. The SurgePOD PRO delivers superior surge protection using MOV thermal disconnect technology that eliminates the need for additional overcurrent protection.

LISTED

RoHS 2011/65/EU

*easy*ID™ LED Status Indicator

Parallel connection to the electrical system permits the SurgePOD PRO SPD to be installed on any ampacity panel.

- Type 1 UL 1449 4th Edition Listed SPDs are easily selected and installed on the loadside or lineside of the service entrance overcurrent protective device
- Voltage specific models precisely match and protect electrical systems and equipment better than "one-size-fits-all" SPDs
- Thermal disconnect technology eliminates the need for additional fusing
- NEMA 4X enclosure for indoor or outdoor applications
- *easy*ID™ LED status indicator provides surge protection status at a glance

Dimensions — in

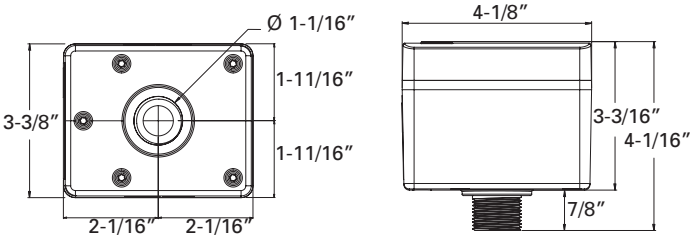

Mounting

SurgePOD PRO is a panel mount device. It may also be mounted using a customer supplied bracket or directly onto a female threaded conduit fitting.

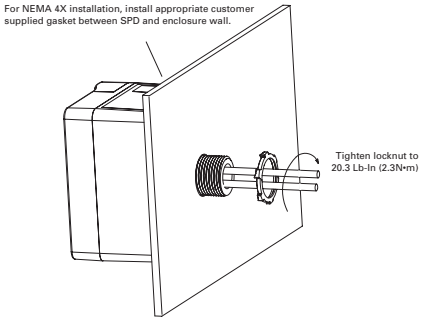

Catalog no.		
SPP40SP1120SN	SPP40SP3240DLG	SPP40SP3208WYG
SPP40SP2240PN	SPP40SP3480DLG	SPP40SP3480WYG
SPP40SP3600WYG		

See catalog number explanation below for details.

Catalog number explanation

This is not a build-a-code for configuring an orderable catalog number. It's purpose is to show what portions of the catalog number denotes which specification.

SPP 40S Px xxx xxx

SPP = Product family

Surge rating

- 40 kA surge current capacity

Number of wires

- P1 = 1, P2 = 2, P3 = 3

System voltage (Vac)

- 120, 208, 240, 480, 600

System type/wires and connection points

- SN = Single-phase 2 wire, 2 connection points
- PN = Split-phase 3 wire , 3 connection points
- DLG = Three-phase Delta 3 wire + G, 4 connection points
- WYG = Three-phase Wye 3 wire + G, 4 connection points

*easy*ID™ LED status indicator

The *easy*ID LED status indicator will illuminate when the unit is properly installed and the system or equipment being protected is energized. The following LED color/status indicates:

GREEN LED = Good

The circuit is energized and protected.

RED LED = Replace

The circuit is energized and unprotected.

The unit needs replacing.

LED is Out / Unlit:

The circuit is most likely deenergized

The unit's leads are disconnected

The unit is damaged

Authorized personnel should follow all prescribed lockout/tagout and safety procedures in troubleshooting the cause for the above conditions. Opening SurgePOD PRO enclosure will void the warranty.

Data sheet no. 10033

SurgePOD PRO

Catalog no.	Nominal system voltage	Max. continuous operating AC voltage (MCOV) (V_C)	System type	Connection points
SPP40SP1120SN	120	150	Single-phase 2 wire	2
SPP40SP2240PN	120/240	150	Split-phase 3 wire	3
SPP40SP3240DLG	240	320	Three-phase Delta 3 wire + G	4
SPP40SP3480DLG	480	550	Three-phase Delta 3 wire + G	4
SPP40SP3208WYG	208	150	Three-phase Wye 3 wire + G	4
SPP40SP3480WYG	480	320	Three-phase Wye 3 wire + G	4
SPP40SP3600WYG*	600	420	Three-phase Wye 3 wire + G	4

* Not CSA Certified.

Specifications (for all SurgePOD PRO units)	Values
Short-Circuit Current Rating (SCCR)	200 kA
Nominal discharge current (8x20µs) (I_n)	10 kA
Surge current capacity (8x20µs) (I_{max})	40 kA
Response time (ns) (t_A)	<25ns
Frequency	50/60 Hz
Operating state/fault indication	Bi-color LED - green (good) / red (replace)
Conductor length / gauge	18 inches, 10 AWG stranded tinned copper
Mounting	Chase nipple / bracket*
Enclosure / flammability ratings	NEMA 4X - UL 94-5VA
Degree of protection (installed state)	IP20 (finger-safe)
SPD install location	Indoor/outdoor
Circuit location	Lineside or loadside of service entrance overcurrent protective device
Operating temperature	-40°C to +65°C
Maximum operating altitude	12,000FT
Agency information	UL Listed, CSA Certified, RoHS compliant
Standard	UL Type 1 1449 4th Edition SPD
Warranty	Two years**

* Customer-supplied bracket.
**See Limited Warranty Statement 3A1502 for details at Eaton.com/bussmannseries.

Voltage protection ratings (VPR)

Catalog no.	Nominal system voltage	MCOV (V_C)	Voltage Protection Ratings (VPR)		
			L-N	L-L	L-G
SPP40SP1120SN	120	150	700	—	—
SPP40SP2240PN	120V/240	150	700	1200	—
SPP40SP3240DLG	240	320	—	2500	1200
SPP40SP3480DLG	480	550	—	3000	1800
SPP40SP3208WYG	208	150†	—	1200	700
SPP40SP3480WYG	480	320†	—	2500	1200
SPP40SP3600WYG	600	420†	—	2500	1500

† SPD voltages are measured from Line-to-Neutral, or Line-to-Ground on systems where there is no neutral present. These units do not have a line-to-neutral, so the line-to-ground voltage is 120 V for the 208 V Wye L-G and 277 V for the 480 V L-G, making the normal voltage applied to the unit less than the MCOV values listed in the table.

BSPA NEMA 4X Type 1 and 2

The Bussmann series BSPA surge protective devices are UL 1449 4th Edition surge protectors. Application of BSPA units throughout a facility will help ensure that equipment is protected from damaging surges.

The BSPA compact NEMA 4X enclosure allows for installation external to an electrical assembly in a variety of environments.

BSPA units are available in all common voltage and system configurations, and in a variety of peak surge current capacity ratings from 50 through 200 kA per phase. Several feature package options (filtering, audible alarm and Form C contacts) extend application flexibility along with a range of configurable options suitable for most commercial and light industrial applications covering service entrances, distribution panelboards and point-of-use applications.

Agency information

- UL 1449 4th Edition Type 1 and Type 2
- UL 1283 6th Edition
- Canadian Standards Association (CSAT) Type 1 and Type 2
- CSA C22.2 No. 269.1-14 for Type 1 SPD, CSA C22.2 No. 269.2-13 for Type 2 SPD, CSA C22.2 No. 8-13 for EMI filter
- RoHS compliant

Features

- Thermally-protected metal oxide varistor (MOV) technology
- Tri-colored LED status indicators display continuous self-diagnostic testing, including neutral-ground mode
- 20 kA nominal discharge current (I_n) rating (maximum rating in the UL 1449 4th Edition standard)
- 50 through 200 kA per phase peak surge current capacity ratings
- Configure to order with five feature/option combinations
- Corrosion-resistant NEMA 4X enclosure with detachable mounting feet
- 200 kA short-circuit current rating (SCCR)
- Factory wired with 36-inch 10 AWG leads
- Optional Form C contact relay for integration into remote monitoring systems*
- Optional EMI/RFI filtering form improved power quality*
- Optional audible alarm*
- No user-serviceable parts or items requiring periodic maintenance
- Ten-year warranty

* See catalog number system for availability.

Catalog number system

The catalog numbering system permits specifying any combination to meet requirements.

BSPA 200 208Y 8 P

BSPA = Product family

Surge rating per phase

- 050 = 50 kA per phase
- 100 = 100 kA per phase
- 150 = 150 kA per phase
- 200 = 200 kA per phase

Voltage/system code

- 120N = 120 V single-phase (2W +G)
- 240N = 240 V single-phase (2W +G)
- 240S = 120/240 V split-phase (3W +G)
- 240D = 240 V Delta (3W + G)
- 480D = 480 V Delta (3W + G)
- 600D = 600 V Delta (3W + G)
- 208Y = 120/208 V Wye (4W + G)
- 415Y = 240/415 V Wye (4W + G)
- 480Y = 277/480 V Wye (4W + G)
- 600Y = 347/600 V Wye (4W + G)

Options

- 1 = No options (standard configuration), Type 1
- 4 = Form C relay, Type 1
- 5 = Audible alarm and Form C relay, Type 1
- 7 = EMI filtering and Form C relay, Type 2
- 8 = EMI filtering, audible alarm and Form C relay, Type 2

NEMA enclosure

- P = NEMA 4X

BSPA wire port and conductors

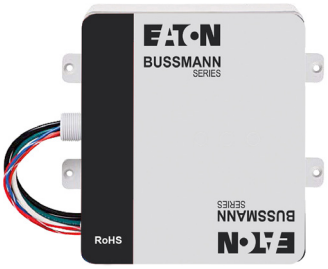

BSPA with mounting feet

Data sheet no. 10661

BSPA configurations

The BSPA allows for selecting along with the standard features the audible alarm, Form C relay contacts and EMI/RFI filtering options shown in table 1.

Configurable features

Feature	Standard	Options
Surge protection using thermally protected MOV technology	•	
Tri-colored LED protection status indicators for each phase	•	
Tri-colored LED protection status indicators for the neutral-ground protection mode	•	
Audible alarm		•
Form C relay contact		•
EMI/RFI filtering, for up to 40 dB of noise attenuation from 10 kHz to 100 MHz*		•

* Available on Type 2 SPD units only.

Tri-colored LED status indicators

These LED indicators show continuous self-diagnostic testing, including neutral-ground mode and display:

- Green—Fully protected
- Yellow—Loss of neutral-to-ground protection
- Red—Loss of protection

LED protection status indicators showing full protection and phase faults

Enclosure ratings, options, dimensions and weights

The BSPA NEMA 4X enclosure is supplied with mounting feet to facilitate installation in a variety of applications. There are two enclosure sizes, P1 and P2, dependent on the voltage code and surge rating.

Available optional equipment

Available option	Catalog no.
Flush mount plate for P1 enclosure	BSPA-FLUSHPLT1
Flush mount plate for P2 enclosure	BSPA-FLUSHPLT2

BSPA voltage configurations per enclosure size*

P1 enclosure		P2 enclosure	
Voltage code	kA	Voltage code	kA
120N/240N	50–200	240S	120–200
240S	50-100	208Y/415Y/480Y/600Y	
208Y/415Y/480Y/600Y		240D/480D	
240D/480D		600D	50–200

* See catalog number system for voltage code details.

Voltage protection ratings (VPRs) per ANSI/UL 1449 4th Edition

Voltage code	Protection mode			
	L–N	L–G	N–G	L–L
50 kA unit VPR				
120N	700	1200	700	—
240N	1200	2000	1500	—
240S	700	1200	700	1200
208Y	700	1200	700	1200
415Y	1200	2000	1500	2000
480Y	1200	2000	1500	2000
600Y	1500	1500	1500	2500
240D	—	1000	—	1000
480D	—	2000	—	2500
600D	—	2500	—	2500
100 kA unit VPR				
120N	600	600	600	—
240N	1200	1200	1200	—
240S	600	600	600	1000
208Y	600	600	600	1000
415Y	1200	1200	1200	2000
480Y	1200	1200	1200	2000
600Y	1500	1500	1500	2500
240D	—	1000	—	1000
480D	—	2000	—	2500
600D	—	2500	—	2500
150-200 kA unit VPR				
120N	700	700	700	—
240N	1000	1200	1000	—
240S	700	700	700	1200
208Y	700	700	700	1200
415Y	1200	1200	1200	2000
480Y	1200	1200	1200	2000
600Y	1500	1500	1500	2500
240D	—	1000	—	1000
480D	—	1800	—	2000
600D	—	2500	—	2500

BSPA specifications

Description		Value
Leads	Length	36″
	Size	10 AWG stranded copper
Mounting		Chase nipple/panel (with mounting feet)
Peak surge current capacity ratings available		50, 100, 150, 200 kA per phase
Nominal discharge current (In)		20 kA
Short-circuit current rating (SCCR)		200 kA
Single-phase voltages available (2W + G)		120, 240
Split-phase voltages available (3W +G)		120/240
Three-phase Wye system voltages available (4W + G)		120/208, 240/415, 277/480, 347/600
Three-phase Delta system voltages available (3W + G)		240, 480, 600
Input power frequency		50/60 Hz
Protection modes	Single–phase	L–N, N–G, L–G
	Split–phase	L–N, N–G, L–G, L–L
	Wye	L–N, N–G, L–G, L–L
	Delta	L–G, L–L
Maximum continuous operating voltage (MCOV):	Voltage code	
	120N	150 L–N, 150 L–G, 150 N–G
	240N	320 L–N, 320 L–G, 320 N–G
	240S, 208Y	150 L–N, 150 L–G, 150 N–G, 300 L–L
	415Y, 480Y	320 L–N, 320 L–G, 320 N–G, 640 L–L
	600Y	420 L–N, 420 L–G, 420 N–G, 840 L–L
	240D	320 L–G, 300 L–L
	480D	550 L–G, 640 L–L
	600D	840 L–G, 840 L–L
Ports		1
Operating and storage temperature		–40°F to +140°F (–40°C to +60°C)
Operating humidity		5% through 95%, non-condensing
Operating altitude		Up to 2000 m (6561 ft)
Agency information		UL 1449 4th edition, UL 1283 6th edition, CSA C22.2 No. 269.1-14 for Type 1 SPD, CSA C22.2 No. 269.2-13 for Type 2 SPD, CSA C22.2 No. 8-13 for EMI filter
Durability/repetitive strike test		Passed 12,000 strikes to ANSI/IEEE C62.41 (20 kV, 10 kA) Category C waveform
SPD type		UL 1449 4th edition and CSA Type 1 and Type 2 SPD (dependent on feature options)
Enclosure dimensions and weights		Refer to Figure 1 and Figure 3 for enclosure dimensions and weights
Enclosure rating		NEMA 4X enclosure*
Form C relay contact ratings		2 A at 30 Vdc or 250 Vac
Form C relay contact logic		Power ON, normal state—NO contact = open, NC contact = closed
		Power OFF or fault state—NO contact = closed, NC contact = open
EMI/RFI filtering attenuation		Up to 40 dB from 10 kHz to 100 MHz
RoHS compliant		Yes
Warranty		Ten years standard

* Mounting feet required to achieve NEMA 4X rating.

Data sheet no. 10661

Dimensions — in (mm)

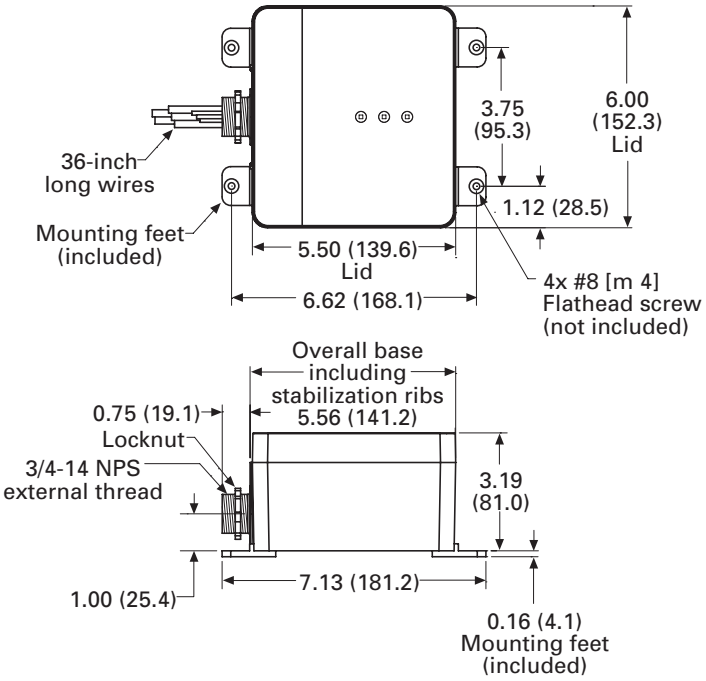

P1 enclosure, NEMA 4X with mounting feet dimensions, weight = 2.5 lb

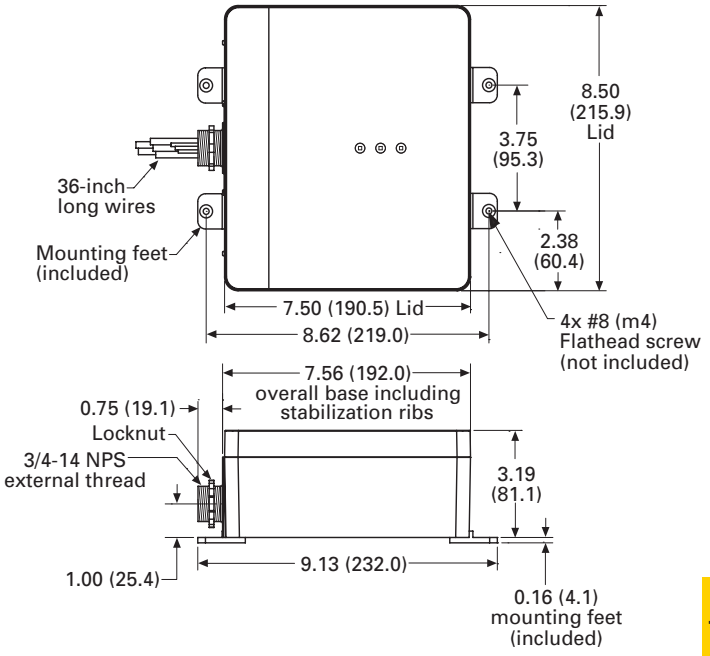

P2 enclosure, NEMA 4X with mounting feet dimensions, weight = 4 lb

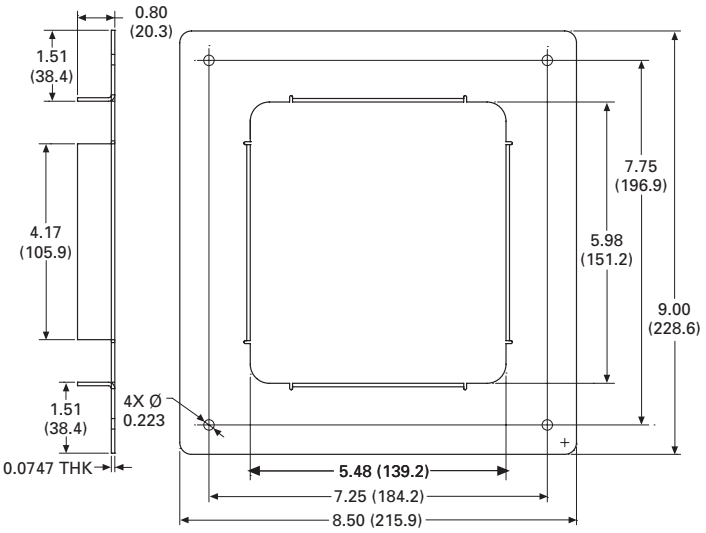

Optional flush mount plate for P1 enclosure (catalog number BSPA-FLUSHPLT1)

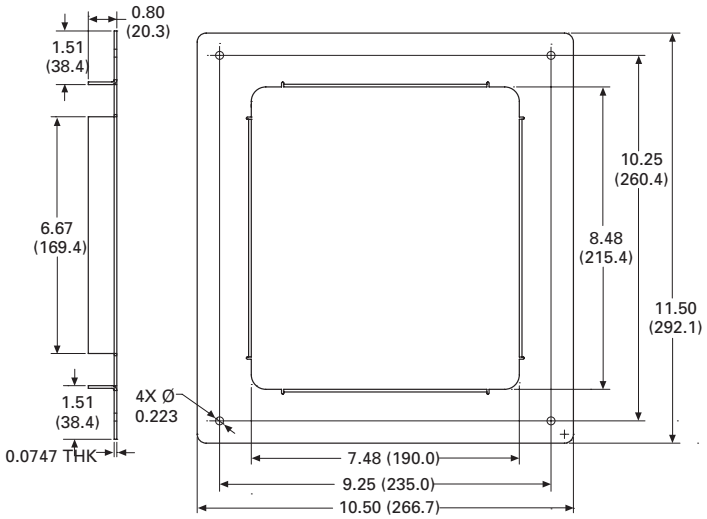

Optional flush mount plate for P2 enclosure (catalog number BSPA-FLUSHPLT2)

BSPD high capacity Type 1 and 2

BSPD Surge Protective Devices (SPDs) are UL Listed 1449 4th Edition Type 1 or UL Recognized 1283 5th Edition Type 2 surge protectors, depending on the configuration. The BSPD is available for installation external to an electrical enclosure or panelboard. Application of BSPD units throughout a facility will help ensure that equipment is protected.

NEMA 1 steel enclosure 120 kA and 200 kA maximum surge current capacity

BSPD units are available for common Delta and Wye voltage systems in a variety of surge current capacity ratings from 120 kA through 400 kA. Available in three configurations, the BSPD's configurations and options make it easy to specify units for many electrical applications; including service entrances, distribution switchboards, panelboards and point-of-use.

NEMA 1 steel enclosure 300 kA and 400 kA maximum surge current capacity

NEMA 4X 304 Stainless Steel enclosure, all surge current capacities

- *Basic*, *Standard* and *Standard with Surge Counter* configurations UL Listed 1449 4th Edition, Guide VZCA, File E316410, CSA Certified Notice 516 File 243397
- Standard and Standard with Surge Counter configurations are also UL Recognized 1283 5th Edition, Guide VZCA2, File E316410, CSA Component Acceptance Std. C22.2
- RoHS compliant
- 20 kA nominal discharge current (I_n) rating (maximum rating assigned by UL)
- 120 kA through 400 kA per phase surge current capacity (I_{max}) ratings
- 200 kA Short-Circuit Current Rating (SCCR)
- Two color LED status indicators for each phase on Delta and Wye units, plus N-G on Wye units
- 10-Year warranty

Configurations

The BSPD provides users with the option of selecting between three configurations:

- *Basic* (Type 1)
- *Standard* with Form C contact and EMI/RFI filter (Type 2)
- *Standard with Surge Counter* (Type 2)

The appropriate configuration can be specified from the catalog number system based on the application's requirements or specifications.

Catalog number system

The catalog numbering system permits specifying any combination to meet requirements.

BSPD 200 480D 2 K

BSPD = Product family

Surge rating per phase

- 120 = 120 kA
- 200 = 200 kA
- 300 = 300 kA
- 400 = 400 kA

Voltage/system code

- 208Y = 120/208 Wye (4W + G)
- 480Y = 277/480 Wye (4W + G)
- 600Y = 347/600 Wye (4W + G)
- 240D = 240 Delta (3W + G)
- 480D = 480 Delta (3W + G)
- 600D = 600 Delta (3W + G)

Configurations

- 1 = Basic
  - Green and red LEDs per phase to indicate protection status.
  - Green and red LEDs on Wye units to indicate protection status of the neutral-to-ground mode
- 2 = Standard
  - Green and red LEDs per phase to indicate protection status
  - Green and red LEDs on Wye units to indicate protection status of the neutral-to-ground mode
  - Audible alarm with silence button
  - Form C contact relay
  - EMI/RFI filtering providing up to 50 dB of noise attenuation from 10 kHz to 100 MHz
- 3 = Standard With Surge Counter
  - Green and red LEDs per phase to indicate protection status
  - Green and red LEDs on Wye units to indicate protection status of the neutral-to-ground mode
  - Audible alarm with silence button
  - Form C contact relay
  - EMI/RFI filtering providing up to 50 dB of noise attenuation from 10 kHz to 100 MHz
  - Surge counter with reset button

NEMA enclosures

- K = NEMA 1
- P = NEMA 4X

Data sheet no. 10209

BSPD configurations

Features	Configuration: Basic (Type 1)	Standard (Type 2)	Standard with Surge Counter (Type 2)
Two color LED protection status indicators for each phase	X	X	X
Two color LED protection status indicators for the neutral-ground protection mode (Wye systems only)	X	X	X
Audible alarm with silence button		X	X
Form C contact relay		X	X
EMI/RFI filtering, providing up to 50 dB of noise attenuation from 10 kHz to 100 MHz		X	X
Surge counter with reset button			X

Dimensions — in (mm)

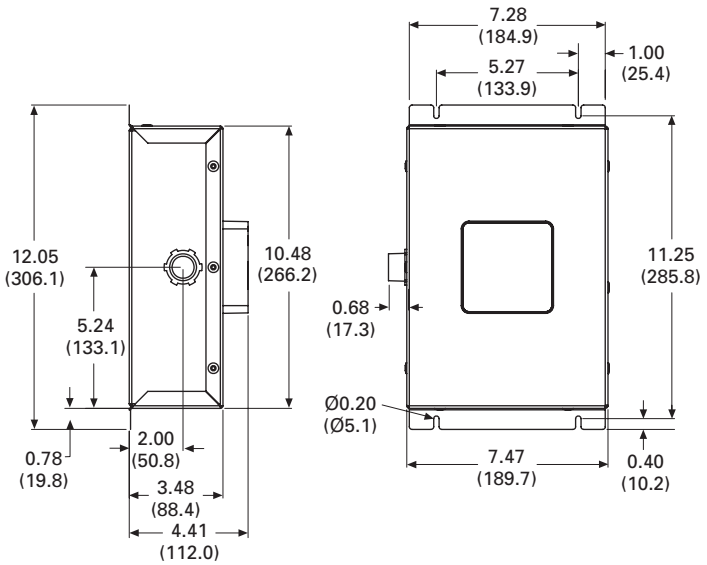

120 kA and 200 kA Units/NEMA 1

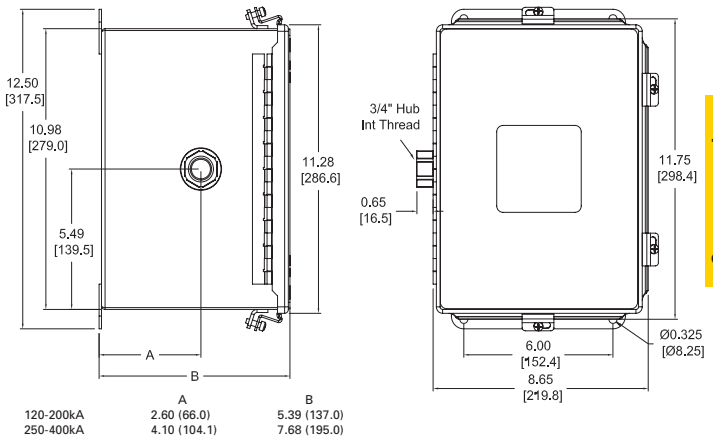

120 kA to 400 kA Units/NEMA 4X

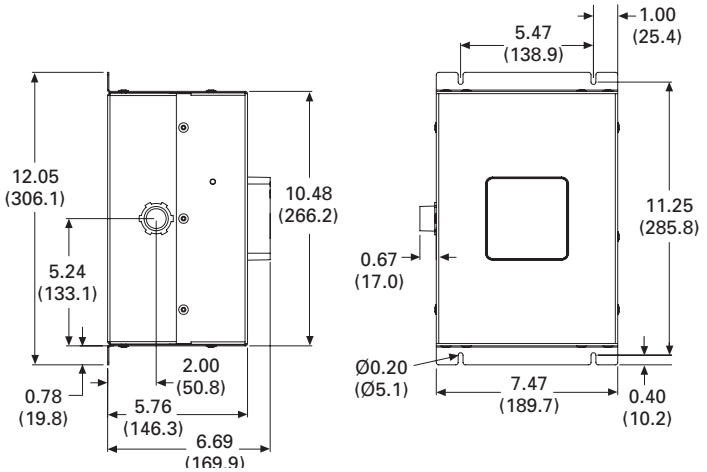

300 kA and 400 kA Units/NEMA 1

Form C Contact relay wire color codes

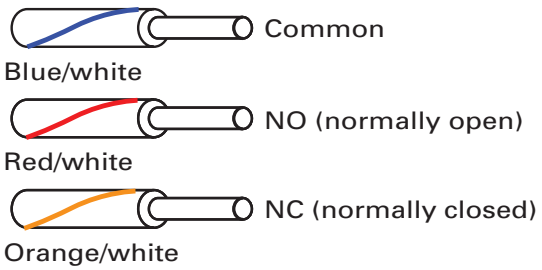

Surge protective devices

Data sheet no. 10209

BSPD specifications

Description	Values
Available system voltages	
Three-phase Wye	120/208, 277/480 and 347/600
Three-phase Delta	240, 480 and 600
Input power frequency	50/60 Hz
Maximum Continuous Operating Voltage (MCOV)	
208Y, and 240D voltage/system codes	150 L-N,150 L-G, 150 N-G, 300 L-L
480Y Voltage/system code	320 L-N, 320 L-G, 320 N-G, 640 L-L
600Y Voltage/system code	420 L-N, 420 L-G, 420 N-G, 840 L-L
480D Voltage/system code	640 L-G, 640 L-L
600D Voltage/system code	840 L-G, 840 L-L
Short-Circuit Current Rating (SCCR)	200 kA
Nominal discharge current (I_n)	20 kA
Surge current capacity per phase (I_{max})	120 kA, 200 kA, 300 kA and 400 kA ratings available
SPD Types	
Type 1	*Basic* configuration, can also be used in Type 2 applications
Type 2	*Standard* and *Standard With Surge Counter* configurations
Enclosure types	NEMA 1
	NEMA 4X 304 stainless steel
Ports	1
SPD conductor length/gauge	48" (1.22m) 10 AWG Stranded copper
Form C contact relay (*Standard* and *Standard With Surge Counter* configurations only)	
Contact ratings	150 Vac or 125 Vdc, 1A maximum
Lead length/gauge	48 inches (1.22m) / 14 AWG
Contact logic	Power ON, normal state; N.O. contact = OPEN, N.C. contact = CLOSED Power OFF, fault state; N.O. contact = CLOSED, N.C. contact = OPEN
Power consumption	
Basic configuration	0.5 W — 208Y and 240D voltage/system codes
	1.1 W — 480Y and 480D voltage/system codes
	1.3 W — 600Y and 600D voltage/system codes
Standard and Standard with Surge Counter configurations	0.6 W — 208Y and 240D voltage/system codes
	1.7 W — 480Y, and 480D voltage/system codes
	2.1 W — 600Y and 600D voltage/system codes
Protection modes	
Three-phase Delta	L-G, L-L
Three-phase Wye	L-N, L-G, N-G, L-L
Operating temperature / humidity	-40 to +50°C (-40 to +122°F) / 5% to 95%, non-condensing
Operating altitude - ft (m)	16,000 (5000)
EMI/RFI filtering attenuation	Up to 50 dB from 10 kHz to 100 MHz (*Standard* and *Standard With Surge Counter* configurations)
Weight - lbs (kg)	
NEMA 1	120-200 kA - 6.8 (3.1)
	300- 400 kA -13.5 (6.1)
NEMA 4X	120-200 kA - 14.6 (6.6)
	300-400 kA - 21.0 (9.5)
Agency information	
Basic, Standard and *Standard with Surge Counter* configurations	UL Listed 1449 4th Edition File E316410 Guide VZCA, CSA Certified Notice 516 File 243397
Standard and *Standard with Surge Counter* configurations	UL Recognized 1283 5th Edition File E316410 Guide VZCA2, CSA Component Acceptance Std. C22.2 No. 8-M1986, File 243397
RoHS compliant	Yes
Seismic withstand capability	Meets or exceeds the requirements specific to I.B.C. 2006, C.B.C. 2007 and U.B.C. Zone 4
Warranty	10 Years (see warranty statement 3A1502 for details at Eaton.com/bussmannseries)

Data sheet no. 10209

Voltage protection ratings

ANSI/UL 1449 4th Edition voltage protection ratings

Voltage Protection Rating (V_{PR}) data for all units is included in the following tables, The data varies based upon the configuration and NEMA enclosure. V_{PR} values for the *Basic* configurations are on the left-hand side of the page. Tables on the right-hand side contain VPR values for the *Standard* or *Standard with Surge Counter* configurations.

NEMA 1: Basic

Catalog numbers ending with 1K.

120-200 kA

	Protection mode			
Voltage/system code	L-N	L-G	N-G	L-L
208Y	700	700	700	1200
480Y	1200	1200	1200	2000
600Y	1500	1500	1500	2500
240D	—	1000	—	1000
480D	—	2000	—	2500
600D	—	2500	—	2500

300 kA

	Protection mode			
Voltage/system code	L-N	L-G	N-G	L-L
208Y	700	700	700	1000
480Y	1200	1200	1200	1800
600Y	1500	1500	1500	2500
240D	—	1000	—	1000
480D	—	1800	—	2000
600D	—	2500	—	2500

400 kA

	Protection mode			
Voltage/system code	L-N	L-G	N-G	L-L
208Y	700	700	700	1000
480Y	1200	1200	1200	1800
600Y	1500	1500	1500	2500
240D	—	1000	—	1000
480D	—	1800	—	2000
600D	—	2500	—	2500

NEMA 1: Standard or Standard w/ Surge Counter

Catalog numbers ending with 2K or 3K.

120-200 kA

	Protection mode			
Voltage/system code	L-N	L-G	N-G	L-L
208Y	600	800	600	1000
480Y	1200	1200	1200	1800
600Y	1500	1500	1500	2500
240D	—	1000	—	1000
480D	—	2500	—	2500
600D	—	2500	—	2500

300 kA

	Protection mode			
Voltage/system code	L-N	L-G	N-G	L-L
208Y	600	700	600	1000
480Y	1000	1200	1000	1800
600Y	1500	1500	1500	2500
240D	—	1000	—	1000
480D	—	1800	—	2000
600D	—	2500	—	2500

400 kA

	Protection mode			
Voltage/system code	L-N	L-G	N-G	L-L
208Y	600	700	600	1000
480Y	1000	1200	1000	1800
600Y	1500	1500	1500	2500
240D	—	1000	—	1000
480D	—	1800	—	2000
600D	—	2500	—	2500

Voltage protection ratings continued

NEMA 4X: Basic

Catalog numbers ending with 1P.

120–200 kA

Voltage/system code	Protection mode			
	L-N	L-G	N-G	L-L
208Y	700	800	700	1200
480Y	1200	1200	1000	2000
600Y	1500	1500	1500	2500
240D	—	1000	—	1000
480D	—	2000	—	2500
600D	—	2500	—	2500

300 kA

Voltage/system code	Protection mode			
	L-N	L-G	N-G	L-L
208Y	700	800	700	1200
480Y	1200	1200	1200	2000
600Y	1500	1500	1500	2500
240D	—	1000	—	1000
480D	—	1800	—	2000
600D	—	2500	—	2500

400 kA

Voltage/system code	Protection mode			
	L-N	L-G	N-G	L-L
208Y	700	800	700	1200
480Y	1200	1200	1200	2000
600Y	1500	1500	1500	2500
240D	—	1000	—	1000
480D	—	1800	—	2000
600D	—	2500	—	2500

NEMA 4X: Standard or Standard w/ Surge Counter

Catalog numbers ending with 2P or 3P.

120–200 kA

Voltage/system code	Protection mode			
	L-N	L-G	N-G	L-L
208Y	900	900	700	1500
480Y	1200	1200	1000	2500
600Y	1500	1500	1500	2500
240D	—	1000	—	1000
480D	—	2500	—	2500
600D	—	2500	—	2500

300 kA

Voltage/system code	Protection mode			
	L-N	L-G	N-G	L-L
208Y	800	900	700	1500
480Y	1200	1200	1000	2000
600Y	1500	1500	1500	2500
240D	—	1000	—	1000
480D	—	2000	—	2000
600D	—	2500	—	2500

400 kA

Voltage/system code	Protection mode			
	L-N	L-G	N-G	L-L
208Y	800	900	700	1500
480Y	1200	1200	1000	2000
600Y	1500	1500	1500	2500
240D	—	1000	—	1000
480D	—	2000	—	2000
600D	—	2500	—	2500

Data sheet no. 10209

1-Pole, UL Type 1 DIN-Rail high SCCR surge protective devices

RoHS 2011/65/EU

Catalog symbol:

- BSPMA1_S2GR

Description:

The Bussmann™ series one-pole DIN-Rail UL Listed Type 1 surge protective devices feature a high 200 kA SCCR. Replaceable arrestor modules are mechanically coded with the base to ensure against installing an incorrect replacement. The unique module locking system fixes the module to the base, and allows it to be easily replaced without tools by simply depressing the release buttons.

Standard local visual status indication:

The module's visual indicator shows the protective status at a glance: green = good, red = replace.

Remote contact signaling:

The standard three-pole terminal remote Form C contact signaling relay has a floating changeover contact for use as a break or make contact, according to circuit concept.

Ratings:

- System volts/types
  - 120 Vac single-phase
  - 240 Vac single-phase
- Short-circuit Current Rating (SCCR) 200 kA

Agency information:

- UL Listed open Type 1, ANSI/ UL 1449 4th Edition, Guide VZCA, VZCA7
- CSA Type 4-1 Component Assembly, C22.2 No. 269.1-14, Class 2157-27
- RoHS compliant

Mounting

- 35mm Din-Rail

Warranty

- Five years

Dimensions — mm

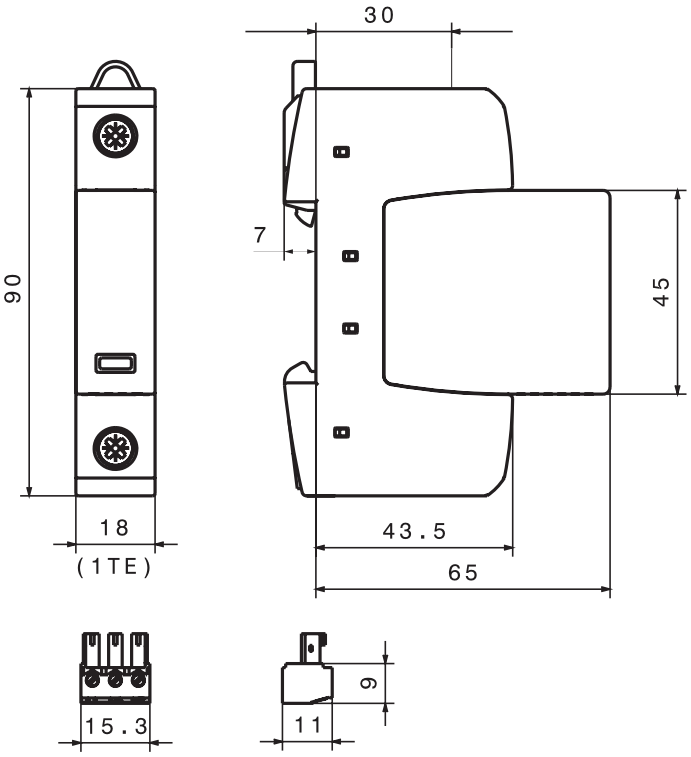

Surge protective devices

Data sheet no. 10771

Specifications/ordering information		
System voltage/type	120 Vac single-phase	240 Vac single-phase
Catalog number	BSPMA1120S2GR	BSPMA1240S2GR
Replacement module catalog number (qty.)	BPMA230UL (1)	BPMA385UL (1)
SPD class per ANSI/UL 1449 4th Ed.	Open-Type 1 SPD	
SPD class per CSA - C22.2 No. 269.1-14	Type 4-1 Component Assembly	
Nominal system voltage (U_N) [L-N/L-G]	127 Vac	277 Vac
Nominal power frequency	50 / 60 Hz	
Max. continuous operating voltage AC (MCOV) [L-L]	230 Vac	385 Vac
Nominal discharge current (I_n) (8x20µs)	20 kA	
Max. discharge current (I_{max}) (8/20)	50 kA	
Voltage Protection Rating (VPR) [L-L]	700 V_{pk}	1200 V_{pk}
Short Circuit Current Rating (SCCR)	200 kA	
Operating temperature range (T_U) °F (°C)	-31 to 185 (-35 to 85)	
Operating state / fault indication	Green = good ; Red = replace	
Wire range (60/75°C Cu, solid/stranded)	2-14 AWG (2.5-35 mm^2)	
Terminal torque — lb-in (N•m)	35-45 (4-5.1)	
Mounting	35 mm DIN-Rail per EN 60715	
Enclosure material	Thermoplastic, UL 94 V0	
Protection	IP20 (finger-safe)	
Capacity	1 module(s), DIN 43880	
Agency information	UL Listed, Guide VZCA, VZCA7/CSA Component Acceptance Class 2157-27, RoHS	
Weight - oz (g)	4.13 (117)	4.44 (126)
Contact signaling		
Signaling type	Floating (dry), Form C (SPDT)	
NEC Circuits	NEC Class 2 circuits only	
Switching capacity AC (DC)	250 V/5 A (250 V/0.1 A, 125 V/0.2 A, 75 V/0.5 A)	
Wire range (60/75°C Cu, solid/stranded)	16-22 AWG (1.5-0.34mm^2)	
Terminal torque - lb-in (N•m)	1.8 (0.2)	

Typical installation/system application:

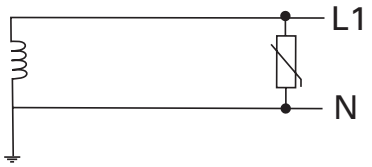

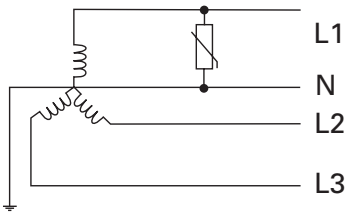

Data sheet no. 10771

2-Pole, UL Type 1 DIN-Rail high SCCR surge protective devices

RoHS 2011/65/EU

Dimensions — mm

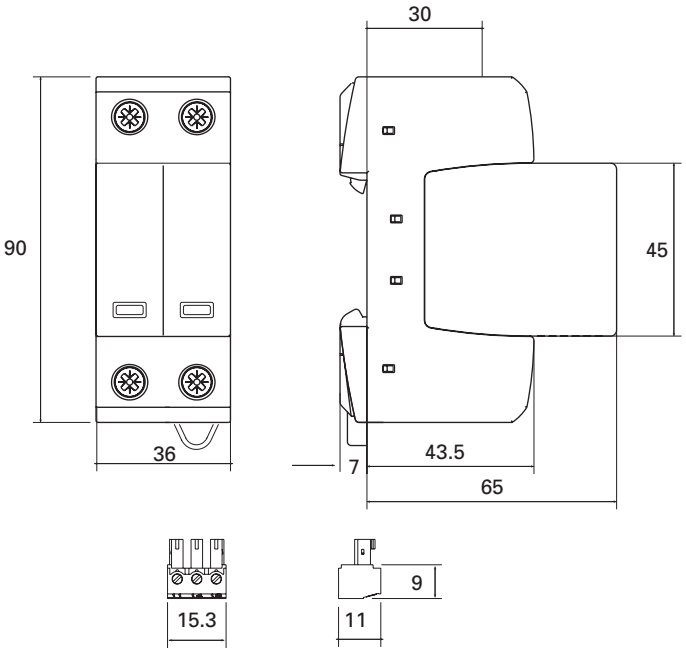

Catalog symbol:

- BSPMA2_S3GR

Description:

The Bussmann™ series two-pole DIN-Rail UL Listed Type 1 surge protective devices feature a high 200 kA SCCR. Replaceable arrestor modules are mechanically coded with the base to ensure against installing an incorrect replacement. The unique module locking system fixes the module to the base, and allows it to be easily replaced without tools by simply depressing the release buttons.

Standard local visual status indication:

The module's visual indicator shows the protective status at a glance: green = good, red = replace.

Remote contact signaling:

The standard three-pole terminal remote Form C contact signaling relay has a floating changeover contact for use as a break or make contact, according to circuit concept.

Ratings:

- System volts/types
  - 120/240 Vac split-phase
  - 240/480 Vac split-phase
- Short-circuit Current Rating (SCCR) 200 kA

Agency information:

- UL Listed open Type 1, ANSI/ UL 1449 4th Edition, Guide VZCA, VZCA7
- CSA Type 4-1 Component Assembly, C22.2 No. 269.1-14, Class 2157-27
- RoHS compliant

Mounting

- 35mm Din-Rail

Warranty

- Five years

Data sheet no. 10772

Specifications/ordering information		
System voltage/type	120/240 Vac split-phase	240/480 Vac split-phase
Catalog number	BSPMA2240S3GR	BSPMA2480S3GR
Replacement module catalog number (qty.)	BPMA230UL (2)	BPMA385UL (2)
SPD class per ANSI/UL 1449 4th Ed.	Open-Type 1 SPD	
SPD class per CSA - C22.2 No. 269.1-14	Type 4-1 Component Assembly	
Nominal system voltage (U_N) [L-G] / [L-L]	127 Vac / 254 Vac	240 Vac / 480 Vac
Nominal power frequency	50 / 60 Hz	
Max. continuous operating voltage AC (MCOV) [L-G] / [L-L]	230 Vac / 460 Vac	385 Vac / 770 Vac
Nominal discharge current (I_n) (8x20µs)	20 kA	
Max. discharge current (I_{max}) (8/20)	50 kA	
Voltage Protection Rating (VPR) [L-G] / [L-L]	700 V_{pk} / 1500 V_{pk}	1200 V_{pk} / 2500 V_{pk}
Short Circuit Current Rating (SCCR)	200 kA	
Operating temperature range (T_U) °F (°C)	-31 to 185 (-35 to 85)	
Operating state / fault indication	Green = good ; Red = replace	
Wire range (60/75°C Cu, solid/stranded)	2-14 AWG (2.5-25 mm^2)	
Terminal torque — lb-in (N•m)	35-45 (4-5.1)	
Mounting	35mm DIN-Rail per EN 60715	
Enclosure material	Thermoplastic, UL 94 V0	
Protection	IP20 (finger-safe)	
Capacity	2 module(s), DIN 43880	
Agency information	UL Listed, Guide VZCA, VZCA7/CSA Component Acceptance Class 2157-27, RoHS	
Weight - oz (g)	7.94 (225)	8.57 (243)
Contact signaling		
Signaling type	Floating (dry), Form C (SPDT)	
NEC® Circuits	NEC Class 2 circuits only	
Switching capacity AC (DC)	250 V/5 A (250 V/0.1 A, 125 V/0.2 A, 75 V/0.5 A)	
Wire range (60/75 °C Cu, solid/stranded)	16-22 AWG (1.5-0.34mm^2)	
Terminal torque — lb-in (N•m)	1.8 (0.2)	

Typical installation/system application:

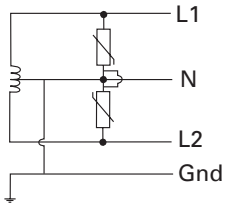

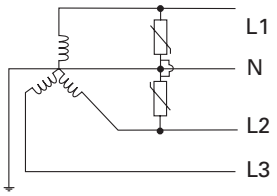

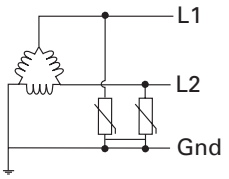

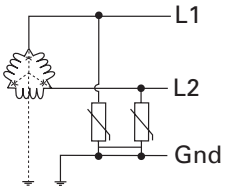

Data sheet no. 10772

3-Pole, UL Type 1 DIN-Rail high SCCR surge protective devices

RoHS 2011/65/EU

Dimensions — mm

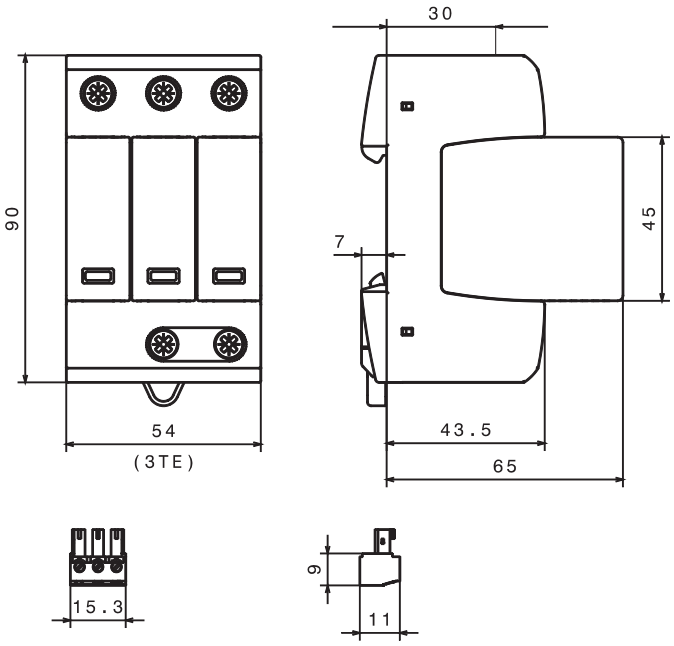

Catalog symbol:

- BSPMA3_WYGR
- BSPMA3_DLGR

Description:

The Bussmann™ series three-pole DIN-Rail UL Listed Type 1 surge protective devices feature a high 200 kA SCCR. Replaceable arrestor modules are mechanically coded with the base to ensure against installing an incorrect replacement. The unique module locking system fixes the module to the base, and allows it to be easily replaced without tools by simply depressing the release buttons.

Standard local visual status indication:

The module's visual indicator shows the protective status at a glance: green = good, red = replace.

Remote contact signaling:

The standard three-pole terminal remote Form C contact signaling relay has a floating changeover contact for use as a break or make contact, according to circuit concept.

Ratings:

- System volts/types
  - 120/208 Vac 3-phase Wye
  - 277/480 Vac 3-phase Wye
  - 347/600 Vac 3-phase Wye
  - 240 Vac 3-phase Delta
  - 480 Vac 3-phase Delta
- Short-circuit Current Rating (SCCR) 200 kA

Agency information:

- UL Listed open Type 1, ANSI/ UL 1449 4th Edition, Guide VZCA, VZCA7
- CSA Type 4-1 Component Assembly, C22.2 No. 269.1-14, Class 2157-27
- RoHS compliant

Mounting

- 35mm Din-Rail

Warranty

- Five years

Specifications/ordering information					
System voltage/type	120/208 Vac 3-phase Wye	277/480 Vac 3-phase Wye	347/600 Vac 3-phase Wye	240 Vac 3-phase Delta	480 Vac 3-phase Delta
Catalog number	BSPMA3208WYGR	BSPMA3480WYGR	BSPMA3600WYGR	BSPMA3240DLGR	BSPMA3480DLGR
Replacement module catalog number (qty.)	BPMA180UL (3)	BPMA385UL (3)	BPMA510UL (3)	BPMA275UL (3)	BPMA550UL (3)
SPD class acc. to ANSI/UL 1449 4th Ed.	Open-Type 1 SPD				
SPD class acc. to CSA - C22.2 No. 269.1-14	Type 4-1 Component Assembly				
Nominal system voltage (U_N) [L-G] / [L-L]	120 Vac / 208 Vac	277 Vac / 480 Vac	347 Vac / 600 Vac	240 Vac / 240 Vac	480 Vac / 480 Vac
Nominal power frequency	50 / 60 Hz				
Max. continuous operating voltage AC (MCOV) [L-G] / [L-L]	180 Vac / 360 Vac	385 Vac / 770 Vac	510 Vac / 1020 Vac	275 Vac / 550 Vac	550 Vac / 1100 Vac
Nominal discharge current (I_n) (8x20µs)	20 kA				
Max. discharge current (I_{max}) (8/20)	50 kA				
Voltage Protection Rating (VPR) [L-G] / [L-L]	600 V_{pk} / 1200 V_{pk}	1200 V_{pk} / 2500 V_{pk}	1500 V_{pk} / 3000 V_{pk}	800 V_{pk} / 1500 V_{pk}	1800 V_{pk} / 3000 V_{pk}
Short Circuit Current Rating (SCCR)	200 kA				
Operating temperature range (T_U) °F (°C)	-31 to 185 (-35 to 85)				
Operating state / fault indication	Green = good ; Red = replace				
Wire range (60/75°C Cu, solid/stranded)	4-14 AWG (2.5-25 mm^2)				
Terminal torque	35-45 (4-5.1)				
Mounting	35 mm DIN-Rail per EN 60715				
Enclosure material	Thermoplastic, UL 94 V0				
Protection	IP20 (finger-safe)				
Capacity	3 module(s), DIN 43880				
Agency information	UL Listed, Guide VZCA, VZCA7/CSA Component Acceptance Class 2157-27, RoHS				
Weight - oz (g)	10.93 (310)	12.24 (347)	13.05 (370)	11.46 (325)	13.4 (380)
Contact signaling					
Signaling type	Floating (dry), Form C (SPDT)				
NEC Circuits	NEC Class 2 circuits only				
Switching capacity AC (DC)	250 V/5 A (250 V/0.1 A, 125 V/0.2 A, 75 V/0.5 A)				
Wire range (60/75°C Cu, solid/stranded)	16-22 AWG (1.5-0.34mm^2)				
Terminal torque - lb-in (N•m)	1.8 (0.2)				

Typical installation/system application:

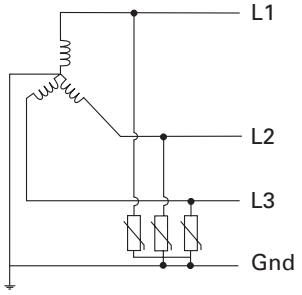

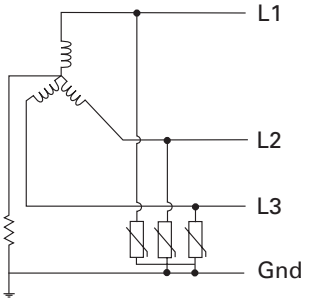

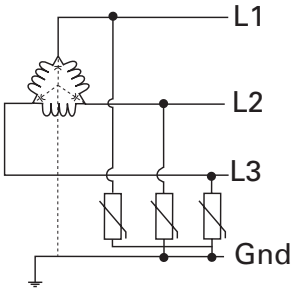

Data sheet no. 10773

4-Pole, UL Type 1 DIN-Rail high SCCR surge protective devices

RoHS 2011/65/EU

Dimensions — mm

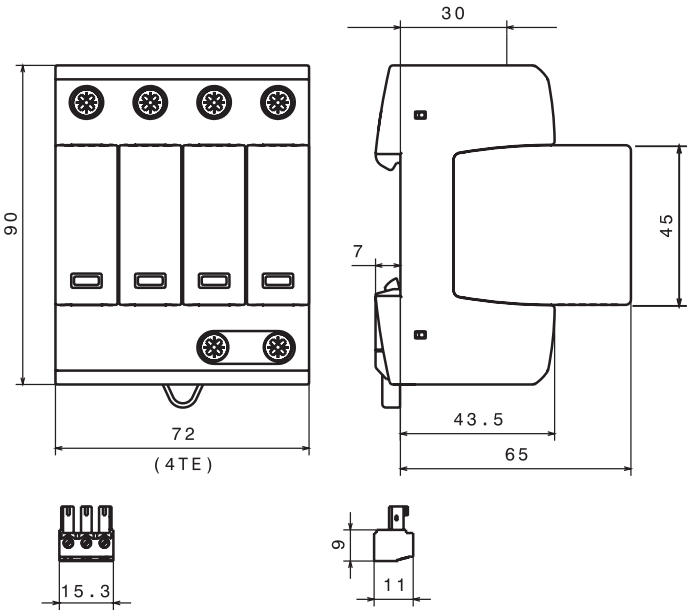

Catalog symbol:

- BSPMA4_WYNGR

Description:

The Bussmann™ series four-pole DIN-Rail UL Listed Type 1 surge protective devices feature a high 200 kA SCCR. Replaceable arrestor modules are mechanically coded with the base to ensure against installing an incorrect replacement. The unique module locking system fixes the module to the base, and allows it to be easily replaced without tools by simply depressing the release buttons.

Standard local visual status indication:

The module's visual indicator shows the protective status at a glance: green = good, red = replace.

Remote contact signaling:

The standard three-pole terminal remote Form C contact signaling relay has a floating changeover contact for use as a break or make contact, according to circuit concept.

Ratings:

- System volts/types
  - 120/208 Vac 3-phase Wye
  - 277/480 Vac 3-phase Wye
- Short-circuit Current Rating (SCCR) 200 kA

Agency information:

- UL Listed open Type 1, ANSI/ UL 1449 4th Edition, Guide VZCA, VZCA7
- CSA Type 4-1 Component Assembly, C22.2 No. 269.1-14, Class 2157-27
- RoHS compliant

Mounting

- 35mm Din-Rail

Warranty

- Five years

Data sheet no. 10774

Specifications/ordering information	System volts/catalog no.	
System voltage/type	120/208 Vac 3-phase Wye	277/480 Vac 3-phase Wye
Catalog number	BSPMA4208WYNGR	BSPMA4480WYNGR
Replacement module catalog number (qty.)	BPMA180UL (4)	BPMA385UL (3), BPMA180UL (1)
SPD class acc. to ANSI/UL 1449 4th Ed.	Open-Type 1 SPD	
SPD class acc. to CSA - C22.2 No. 269.1-14	Type 4-1 Component Assembly	
Nominal system voltage (U_N) [L-N] / [L-G] / [L-L] / [N-G]	120 Vac / 120 Vac / 208 Vac / 0 Vac	277 Vac / 277 Vac / 480 Vac / 0 Vac
Nominal power frequency	50 / 60 Hz	
Max. continuous operating voltage AC (MCOV) [L-N] / [L-G] / [L-L] / [N-G]	180 Vac / 360 Vac / 360 Vac / 180 Vac	385 Vac / 565 Vac / 770 Vac / 180 Vac
Nominal discharge current (I_n) (8x20µs)	20 kA	
Max. discharge current (I_{max}) (8/20)	50 kA	
Voltage Protection Rating (VPR) [L-N] / [L-G] / [L-L] / [N-G]	600 V_{pk} / 1200 V_{pk} / 1200 V_{pk} / 600 V_{pk}	1200 V_{pk} / 1800 V_{pk} / 2500 V_{pk} / 600 V_{pk}
Short Circuit Current Rating (SCCR)	200 kA	
Operating temperature range (T_U) °F (°C)	-31 to 185 (-35 to 85)	
Operating state / fault indication	Green = good ; Red = replace	
Wire range (60/75°C Cu, solid/stranded)	4-14 AWG (2.5-25 mm^2)	
Terminal torque — lb-in (N•m)	35-45 (4-5.1)	
Mounting	35 mm DIN-Rail per EN 60715	
Enclosure material	Thermoplastic, UL 94 V0	
Protection	IP20 (finger-safe)	
Capacity	4 module(s), DIN 43880	
Agency information	UL Listed, Guide VZCA, VZCA7/CSA Component Acceptance Class 2157-27, RoHS	
Weight - oz (g)	13.9 (394)	15.24 (432)
Contact signaling		
Signaling type	Floating (dry), Form C (SPDT)	
NEC Circuits	NEC Class 2 circuits only	
Switching capacity AC (DC)	250 V/5 A (250 V/0.1 A, 125 V/0.2 A, 75 V/0.5 A)	
Wire range (60/75°C Cu, solid/stranded)	16-22 AWG (1.5-0.34mm^2)	
Terminal torque - lb-in (N•m)	1.8 (0.2)	

Typical installation/system application:

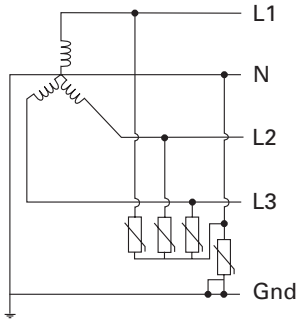

Data sheet no. 10774

BSPM1A_ _ _ _LV(R) low voltage power SPDs

The Bussmann series UL Type 4, 75 Vac/100 Vdc, 120 Vac/200 Vdc single pole, modular surge arresters feature local, *easy*ID™ visual indication and remote contact signaling. The unique module locking system fixes the protection module to the base part. Modules can be easily replaced without tools by simply depressing the release buttons. Integrated mechanical coding between the base and protection module ensures against installing an incorrect replacement module.

LV power system arresters

The features of these single-pole devices are for use as a single device or in combination with other devices for AC and DC voltage systems.

- Surge arrester according to UL 1449 4th Edition, Type 4 Component Assembly for use in Type 2 applications helps meet UL 508A requirements*
- Proven MOV technology for reliable surge protection
- "Thermo Dynamic Control" SPD monitoring device ensures high reliability against surge events
- Module locking system with module release button make module replacement easy without tools
- Remote signaling of all protection modules make status monitoring easy and accurate in any monitoring scheme
- No additional upstream overcurrent protection necessary to make installation easier and more economical
- Vibration and shock tested according to EN 60068-2 to withstand harsh environments

* Except as noted in data sheet no. 2056.

Remote signaling Form C contact

The remote signaling contact versions have a floating changeover contact for use as a break or make contact for easy adoption in any monitoring application.

Dimensions — mm

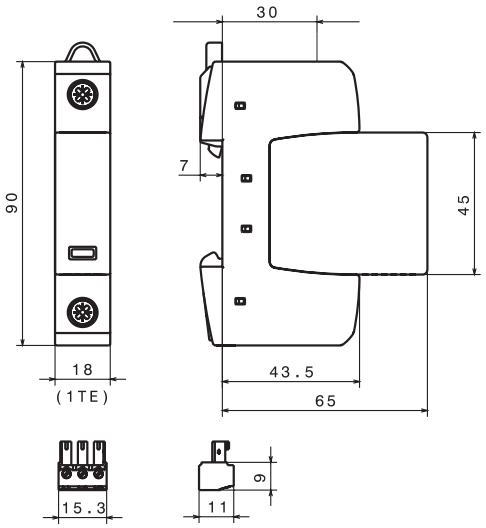

Catalog numbers and specifications

Ordering information — for 75 Vac/100 Vdc to 120 Vac/200 Vdc		System volts/catalog no.	
System voltage		75 Vac/100 Vdc	120 Vac/200 Vdc
Catalog no. (base + modules)	With remote signaling	BSPM1A75D100LVR	BSPM1A150D200LVR
Replacement modules		BPMA75D100LV	BPMA150D200LV
Specifications			
Max. continuous operating AC voltage [V_C]		75 Vac	150 Vac
Voltage protection level [VPL]		≤0.4 kV	≤0.7 kV
Voltage protection level at 5 kA [VPL]		≤0.35 kV	≤0.55 kV
Max. continuous operating DC voltage [V_C]		100 Vdc	200 Vdc
Nominal discharge current (8/20µs) [I_n] AC		10 kA	15 kA
Nominal discharge current (8/20µs) [I_n] DC		10 kA	12.5 kA
Surge current capacity(8/20µs) [I_{max}]		40 kA	40 kA
Temporary overvoltage (TOV)		90 V / 5 sec.	175 V / 5 sec.
Agency information*		UL / cUL, CSA, KEMA	UL / cUL, CSA, KEMA
Specifications — all catalog numbers			
SPD according to EN 61643-11		Type 2	
SPD according to IEC 61643-1		Class II	
Response time [t_A]		≤25ns	
TOV characteristics		Withstand	
Operating temperature range [T_U]		-40°C to +80°C	
Operating state/fault indication		Green (good) / red (replace)	
Number of ports		1	
Cross-sectional area (minimum)		14 AWG solid/stranded	
Cross-sectional area (maximum)		1 AWG solid — 2 AWG stranded	
Mounting		35mm DIN-Rail per EN 60715	
Enclosure material		Thermoplastic, UL 94V0	
Location category		Indoor	
Degree of protection		IP20	
Capacity		1 module, DIN 43880	
Warranty		Five years**	
Remote contact signaling			
Remote contact signaling type		Changeover contact	
AC switching capacity (volts/amps)		250 V/0.5 A	
DC switching capacity (volts/amps)		250 V/0.1 A; 125 V/0.2 A; 75 V/0.5 A	
Conductor ratings / cross-sectional area for remote contact signal terminals		60/75°C Max. 14 AWG solid/stranded	
Ordering information		Order from catalog numbers above	

* Agency information not applicable to DC ratings.
**See Limited Warranty Statement 3A1502 for details at Eaton.com/bussmannseries.

Data sheet no. 2056

BSPH2A_ _ _ _LVR low voltage control SPDs

The Bussmann series UL Type 4 24 Vac/dc, 48 Vac/dc, 60 Vac/dc, 120 Vac/dc and 230 Vac/dc, two-pole, modular surge arresters feature local, *easy*ID visual indication and remote contact signaling. The unique module locking system fixes the protection module to the base part. Modules can be easily replaced without tools by simply depressing the release buttons. Integrated mechanical coding between the base and protection module ensures against installing an incorrect replacement module.

LV system arresters

The features of these two-pole devices are for use in coordination with other upstream SPDs in UL 508A Applications*.

- Surge arrester according to UL 1449 4th Edition, Type 4 Component Assembly for use in Type 3 applications helps meet UL 508A requirements
- Proven MOV and GDT hybrid technology for reliable surge protection
- "Thermo Dynamic Control" SPD monitoring device ensures high reliability against surge events
- Module locking system with module release button make module replacement easy without tools
- Remote signaling on all protection modules make status monitoring easy and accurate in any monitoring scheme
- No additional upstream overcurrent protection needed so installation is easier and more economical
- Vibration and shock tested according to EN 60068-2 to withstand harsh environments

* UL 1449 4th Edition not applicable to DC voltages.

Remote signaling Form C contact

Remote signaling has a floating changeover contact for use as a break or make contact for easy application in any monitoring system.

Dimensions — mm

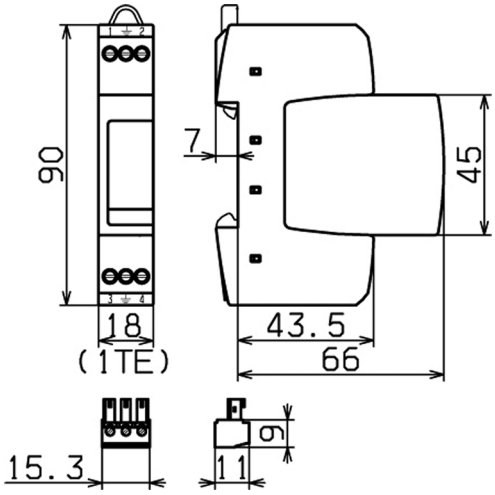

Catalog numbers and specifications

Ordering information	System volts/catalog no.		
System voltage	24 Vac/dc	48 Vac/dc	120 Vac/dc
Max. continuous operating AC voltage (MCOV) [V_C]	30 Vac/dc	60 Vac/dc	150 Vac/dc
Catalog no.(base + modules)	BSPH2A24D24LVR	BSPH2A48D48LVR	BSPH2A150D150LVR
Replacement Modules	BPHA24D24LV	BPHA48D48LV	BPHA150D150LV
Specifications			
Nominal AC voltage [V_o]	24 V	48 V	120 V
Max. continuous operating AC voltage [V_C]	30 V	60 V	150 V
Max. continuous operating DC voltage [V_C]	30 V	60 V	150 V
Nominal discharge current (8/20µs) [I_n]	1 kA	1 kA	2 kA
Total discharge current (8/20µs) [L+N-Gnd] [I_{total}]	2 kA	2 kA	4 kA
Nominal load current AC [I_L]	25 A	25 A	25 A
Combined impulse [U_{OC}]	2 kV	2 kV	4 kV
Combined impulse [L+N-Gnd] [U_{OC} total]	4 kV	4 kV	8 kV
Voltage protection level [L-N] [VPL]	≤180 V	≤350 V	≤640 V
Voltage protection level [L/N-Gnd] [VPL]	≤630 V	≤730 V	≤800 V
SPD according to EN 61643-11		Type 3	
SPD according to IEC 61643-1		Class III	
Response time [L-N] [t_A]		≤25ns	
Response time [L/N-Gnd] [t_A]		≤100ns	
Operating temperature range [T_U]		-40°C to +80°C	
Operating state/fault indication		Green (good) / red (replace)	
Number of ports		1	
Cross-sectional area (min.)		18 AWG solid/stranded	
Cross-sectional area (max.)		10 AWG solid/12 AWG stranded	
For mounting on		35mm DIN-Rail per EN 60715	
Enclosure material		Thermoplastic, UL 94V0	
Location category		Indoor	
Degree of protection		IP20	
Capacity		1 Module, DIN 43880	
Agency information*		UL / cUL, CSA, KEMA	
Product warranty		Five years**	
Remote contact signaling			
Remote contact signaling type		Changeover contact	
AC switching capacity (volts/amps)		250 V/0.5 A	
DC switching capacity (volts/amps)		250 V/0.1 A; 125 V/0.2 A; 75 V/0.5 A	
Conductor ratings and cross-sectional area for remote contact signal terminals		60/75°C Max. 14 AWG solid/stranded	
Ordering information		Order from catalog numbers above	

* Agency information not applicable to DC ratings.
**See Limited Warranty Statement 3A1502 for details at Eaton.com/bussmannseries.

Data sheet no. 2057

BSPD48RJ45 DIN-Rail RJ45/Ethernet cable SPD

The Bussmann series DIN-Rail mount BSPD48RJ45 Surge Protective Device (SPD) is a UL Listed 497B universal DIN-Rail mount surge protective device for RJ45/Ethernet cable systems. It is easy to install or retrofit Ethernet cable systems with RJ connectors.

The BSPD48RJ45 is installed between the patch panel and the active component (a switch for example). The snap-in mechanism of the supporting foot allows the SPD to be safely grounded via the DIN-Rail. For single applications, the BSPD48RJ45 comes with a supplied mounting bracket with cable lug.

Fulfilling the requirements of Category 6, the BSPD48RJ45 can be universally used for all data services up to nominal voltages of 48 V. It is well suited for existing services such as Gigabit Ethernet, ATM, ISDN, Voice over IP and Power over Ethernet (PoE+ acc. to IEEE 802.3at up to 57 V) and similar applications in structured cabling systems according to Class E up to 250 MHz. Protection of all pairs by means of powerful gas discharge tubes and one adapter filter matrix per pair.

- UL 497B Listed
- Easy to install or retrofit for protection of all lines
- CAT 6 according to ISO/IEC 11801
- CAT 6 in the channel (Class E)
- Power over Ethernet (PoE+ according to IEEE 802.3at)

DIN-Rail RJ45 SPDs applications

Catalog no.	BSPD48RJ45
Bus systems, and measuring and control technology	
Industrial Ethernet	X
Data networks	
ATM	X
Ethernet 10/100/1000	X
FDDI, CDDI	X
Industrial Ethernet	X
Power over Ethernet (PoE)	X
Token Ring	X
VG any LAN	X
Video systems	
Video (2 wire)	X

Dimensions — mm

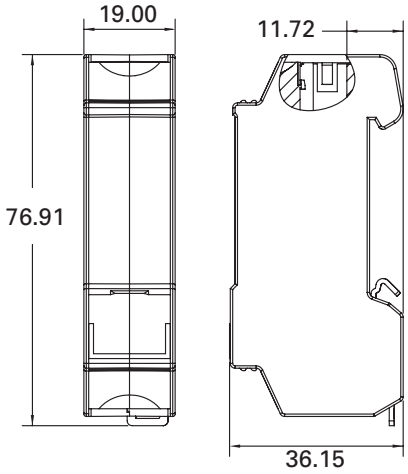

Catalog numbers and specifications

Catalog no.	BSPD48RJ45
Nominal voltage (U_N)	48 V
Max. continuous operating DC voltage (U_C)	48 V
Max. continuous operating AC voltage (U_C)	34 V
Max. continuous DC voltage pair-pair (PoE) (U_C)	57 V
Nominal current (I_L)	1 A
C2 Nominal discharge current (8/20µs) line-line (I_n)	150 A
C2 Nominal discharge current (8/20µs) line-PG (I_n)	2.5 kA
C2 Total nominal discharge current (8/20µs) line-PG (I_n)	10 kA
C2 Nominal discharge current (8/20µs) pair-pair (PoE) (I_n)	150 A
Voltage protection level line-line for In C2 (U_P)	≤190 V
Voltage protection level line-PG for In C2 (U_P)	≤600 V
Voltage protection level line-line for In C2 (PoE) (U_P)	≤600 V
Voltage protection level line-line at 1 kV/µs C3 (U_P)	≤180 V
Voltage protection level line-PG at 1 kV/µs C3 (U_P)	≤500 V
Voltage protection level pair-pair at 1 kV/µs C3 (PoE) (U_P)	≤600 V
Insertion loss at 250MHz	≤3 dB
Capacitance line-line (C)	≤30pF
Capacitance line-PG (C)	≤25pF
Operating temperature range	-40°C to +80°C
Degree of protection	IP10
Mounting	35mm DIN-Rail per EN 60715
Connection (input / output)	RJ45 socket / RJ45 socket
Pinning	1 / 2, 3 / 6, 4 / 5, 7 / 8
Grounding	Via 35mm DIN-Rail per EN 60715
Enclosure material	Die cast zinc
Color	Bare surface
Test standards	IEC 61643-21 / EN 61643-21
Agency information	UL 497B
Warranty	Five years*

* See Limited Warranty Statement 3A1502 for details at Eaton.com/bussmannseries.

BSPD_DING_ DIN-Rail 4 wire SPDs

The Bussmann series universal four-pole, DIN-Rail mounted surge arrester is UL Listed 497B DIN-Rail mount universal surge protective device. It requires minimum space, while providing effective protection for the stringent requirements of measuring and control circuits, and bus systems.

To ensure safe operation, the arrester provides protection against vibration and shock up to a 30-fold acceleration of gravity. The device's function-optimized design allows quick and easy protection module removal via "make-before-break" terminals that assure data signal continuity in the protected and unprotected state.

For IEC Applications - Instruction for Surge Protective Device Use In Zone 2 Explosive Atmospheres per ATEX.

1. When installed in potentially explosive atmospheres, the Data Signal SPD shall be installed into an enclosure which meets the requirements of a recognized type of protection, in accordance with EN 60079-0.
2. The Data Signal DIN SPD as transient suppressor. This approval applies to the following equipment types:
   - BSPD5DINLHF

Ambient and temperature class

- -40°C to 80°C, T4: DEKRA 12ATEX0254 X: II 3 G Ex nA IIC T4 Gc
- Standards used for: ATEX: EN60079-0: 2009, EN 60079-15: 2005

- UL 497B Listed
- Function-optimized design for safe use and easy installation
- Four-pole and base mounts on grounded 35mm DIN-Rail
- Module removal without signal interruption via "make-before-break" circuitry

Dimensions — mm

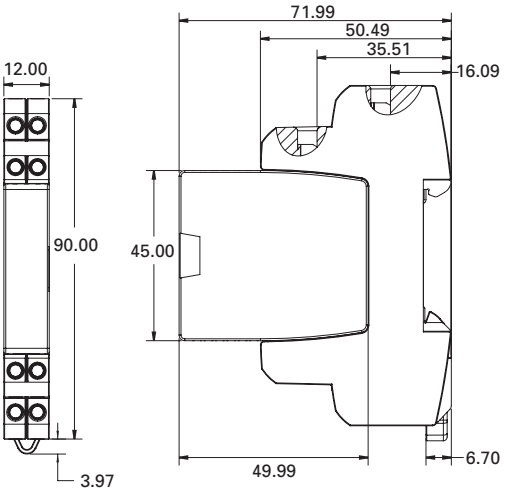

DIN-Rail universal 4 wire data signal SPD applications

Universal 4 wire data signal SPD is specified by communication technology.

The table below contains the specific technology to which the BSPD5DINLHF is suited to be used.

System type
Bus systems and measuring, and control technology
CAN-Bus (data line only)
C-Bus (Honeywell)
Device Net (data line only)
FSK
IEC-Bus (RS485)
Interbus INLINE,
LON - TP/XF 78
MODBUS
MPI Bus
Procontic T200 (RS422)
PROFIBUS DP/FMS
PROFIBUS SIMATIC NET
PSM EG RS422 & RS485
Rackbus (RS485)
R Bus
RS 485
RS422, V11
SafetyBUS p
Securilan LON Bus
SUCONET

The table below contains the specific technology to which the BSPD24DING is suited to be used.

System type
Bus systems and measuring, and control technology
0-20mA, 4-20mA signals
Binary signals
TTYy 4-20mA

Data sheet no. 2161

Catalog numbers and specifications

Catalog number	BSPD24DING	BSPD5DINLHF
Nominal voltage (U_N)	24 V	5 V
Nominal current at 45°C (I_L)	0.75 A	1.0 A
VPL line-line for limp D1 (U_p)	≤102 V	≤25 V
VPL line-PG for limp D1 (U_p)	≤66 V	≤550 V
VPL line-line at 1 kV/µs C3 (U_p)	≤90 V	≤11 V
VPL line-PG at 1 kV/µs C3 (U_p)	≤45 V	≤550 V
D1 Total lightning impulse current (10/350 µs) (I_{imp})	10 kA	10 kA
D1 Lightning impulse current (10/350 µs) per line (I_{imp})	2.5 kA	2.5 kA
C2 Total nominal discharge current (8/20µs) (I_n)	20 kA	20 kA
C2 Nominal discharge current (8/20µs) per line (I_n)	10 kA	10 kA
Series impedance per line	1.8 Ω	1.0 Ω
Max. continuous operating DC voltage (U_C)	33 V	6 V
Max. continuous operating AC voltage (U_C)	23.3 V	4.2 V
Cut-off frequency line-PG (f_G)	6.8 MHz	100 MHz
Capacitance line-line (C)	≤0.5 nF	≤25 pF
Capacitance line-PG (C)	≤1.0 nF	≤16 pF
ATEX Approvals	†	†
Agency information	††	††
IEC 61643-21 test category	D1, C2, C3	
Operating temperature range	-40°C to +80°C	
Degree of protection	IP20	
For mounting on	35mm DIN-Rails per EN 60715	
Grounding	Via base part	
Color / enclosure material	Grey / Polyamide PA 6.6	
Test standards	IEC 61643-21 / EN 61643-21, UL 497B	
Connection (input / output)	Screw terminal	
Conductors	Solid: 12-28 AWG (4-0.08 mm²)	
	Flexible: 14-28A WG (2.5-0.08 mm²)	
Terminal torque	3.5 Lb-In (0.4 N•m)	
Warranty	5 Years*	

* See Bussmann series SPD Limited Warranty Statement (3A1502) for details at Eaton.com/bussmannseries.
† DEKRA 12ATEX0254 X: II 3 G Ex nA IIC T4 Gc.
††ATEX, UL, CSA.

The power of space

The revolutionary **Bussmann™ series Low-Peak™ CUBEFuse™** delivers the smallest footprint compared to any Class J, RK or T fuse solution — requiring up to 70% less space when combined with its unique fuse holder or UL® 98 Listed Compact Circuit Protector.

Freeing up space is powerful. And the CUBEFuse does just that, while packing a 300 kA interrupting rating and enabling higher panel SCCR. Plus, it features plug-in capability for easier installation.

What will you do with all that space?

CUBEFuse.com
The evolution continues. 2018.

EATON
Powering Business Worldwide