**Bussmann series**
NH Gear catalogue

BUSSMANN
SERIES

# Leadership in fusible circuit protection

EATON
*Powering Business Worldwide*

Eaton is the leading source of fusible circuit protection solutions in the global marketplace. Eaton's Bussmann series products are approved for use around the world and meet agency requirements and international standards: IEC, VDE, DIN, UL, CSA, BS and others.

The headquarter for Eaton's Bussmann series product line is located in Burton-on-the-Wolds, Leicestershire (UK) and is part of Eaton's Industrial Control and Protection EMEA division.

Eaton manufactures over 50,000 Bussmann series part numbers, covering extensive fusible circuit protection solutions for a wide range of applications: residential, industrial, motor protection, power conversion and distribution.

Eaton has been a leading exponent in the design, development and manufacture of fuse links and their associated accessories for more than 100 years and has supplied fuse links to more than 90 countries worldwide.

Eaton's team of specialist Engineers and Field Applications Engineers plays a leading role in international standardisation of fuse links offering comprehensive advice on selection and applications.

With a continual commitment to meet our customers' needs with innovative high quality products with ISO 9001 'approval systems', Eaton is the supplier of choice for circuit protection solutions.

# Eaton offers a wide range of Bussmann series fuse rails and switch disconnectors.

Their compact dimensions and enhanced safety make them suitable for varied applications. They are available up to 1600 A in horizontal and up to 630 A in vertical format, suitable for mounting NH fuselinks. They comply to IEC 60947-1 & IEC 60947-3.

**The vertical fuse switch disconnectors** (EBV00 - EBV3) are available in 3 pole versions, and depending on application, are rated from 160 A to 630 A; size 4 1250 A available on request. Versatility of the product is enhanced by having the option to reverse - top/bottom cable terminal connection. The body of the switch is made of V0 flame retardant materials. IP30 degree of protection is provided against any contact from the front. The contacts are silver plated offering low watt loss. Current transformers and ammeters are available as accessories.

**The vertical fuse rails** (EBF000-EBF3) are available in 3 pole version with variations in output clamps and rated at 160, 250, 400 and 630 A.

A comprehensive range of NH fuse bases suitable for industrial application up to 690 V a.c..

Typical Applications for the vertical fuse switch disconnectors and rails :

- Transformer substations
- Distribution boards
- Feeder pillars
- Cable distribution cabinets

**The horizontal fuse switch disconnectors** offers a comprehensive choice of ratings and sizes (EBH000 – 100 A to 630 A) with direct connection to aluminium and copper cables and wide range of cable terminations. Installation can be via a mounting plate or directly onto a busbar system with hooked clamps. The body of the switch is made of V0 flame retardant materials. The contacts are silver plated offering low watt loss.

Typical Applications :

- Motor Control Centres
- Distribution Boards
- Cable Distribution cabinets

# Table of contents


| | |
|---|---|
| EBF Vertical fuse rail | 5 - 18 |
| EBH Horizontal fuse switch disconnector | 19 - 52 |
| EBV Vertical fuse switch disconnector | 53 - 73 |
| NH DIN Fuse links overview | 74 - 75 |
| Index | 76 - 77 |

# EBF

## Vertical fuse rail

- Self extinguishing thermoplastics with flame retardant
- Touch protection IP20 with fuse links shrouds


| | |
|---|---|
| EBF Introduction | 6 |
| EBF Technical data | 7 |
| EBF Catalogue numbers structure | 7 |
| EBF00 100 mm busbar system | 8-9 |
| EBF00 185 mm busbar system | 10 |
| EBF2 185 mm busbar system | 11-12 |
| EBF3 185 mm busbar system | 11 and 13 |
| EBF2 and 3 with lateral busbar terminal | 14 |
| Outline drawings | 15-16 |
| Accessories | 17-18 |

## General information

Eaton's Bussmann series NH vertical fuse rails are specifically designed to be used with NH fuse links. All energised metal parts are fully protected against accidental contact. They are intended for direct installation on horizontal or vertical busbar systems.

## Applications

EBF Vertical fuse rails are designed for the distribution of electricity and protection against short circuits and overloads in three phase systems with maximum operating voltage of 690 V a.c. They are intended for direct installation on horizontal or vertical busbar system. Due to their modern and compact design installing is easy and saves space in substations and distribution boards.

The EBF vertical fuse rails are designed to suit various market requirements and comply to IEC 60269-1 and 60269-2.

## Sizes

EBF vertical fuse rails are available in following sizes:

- 00 (160 A)
- 2 (400 A)
- 3 (630 A)

## Construction

Plastic parts of EBF vertical fuse rails are made of fibre glass strengthened, thermoplastic polyamides.

Silver plated contacts provide low power loss.

All energised metal parts are fully protected against accidental touch.

Removal of the fuse link provides clearly noticeable, large isolating gap in the circuit.

Flexibility to terminate circular or sector-shaped busbar conductors for V or 2V terminals. Conductors with lugs can be terminated with screw terminals.

Touch protection IP 20 with fuse link shrouds for sizes 2 and 3 fuse rails.

## Mounting

Sizes 00, 2 and 3 are designed for installation on 185 mm busbar system.

EBF00/100 mm fuse rails are designed for installation on 100 mm busbar system installation. They can be installed on 185 mm busbar system by using an adaptor.

Fuse rails width

- size 00 – 50 mm
- size 2, 3 - 100 mm,

## Operating conditions

- To be installed in a room free of any dust, aggressive or explosive gases
- Altitude up to 2000 meters above sea level
- Outdoor – in cabinets with protection degree > IP 34
- Ambient temperature from -25 °C to +55 °C – but in case of use of disconnectors in temperature from +41 °C to +45 °C current value $I_{th}$ should be reduced by 5 percent and within temperature range of +46 °C to +55 °C current value $I_{th}$ should be reduced by 10 percent
- Relative humidity of the air should not be higher than 50 percent at temperature of +40 °C

## Technical data

| Description | EBF00 / 100 mm | EBF00 / 185 mm | EBF2 | EBF3 |
|---|---|---|---|---|
| Size | 00 | 00 | 2 | 3 |
| Rated thermal current $I_{th}=I_n$ | 160 A | 160 A | 400 A | 630 A |
| Rated voltage $U_n$ | 690 V a.c. | 690 V a.c. | 690 V a.c. | 690 V a.c. |
| Rated insulation voltage $U_i$ | 1000 V a.c. | 1000 V a.c. | 1000 V a.c. | 1000 V a.c. |
| Rated frequency | 50-60 Hz | 50-60 Hz | 50-60 Hz | 50-60 Hz |
| Rated power dissipation | 12 W | 12 W | 45 W | 60 W |
| Rated short-circuit withstand current | 100 kA | 100 kA | 100 kA | 100 kA |
| Mechanical durability (number of cycles) | 100 | 100 | 100 | 100 |
| Weight (without terminals) | 0,75 kg | 2 kg | 4,50 kg | 5 kg |
| IP degree of protection (IP) | 00 | 00 | 20* | 20* |
| Compatible NH Fuse link body size | 00 | 00 | 1, 2 | 3 |

* with fuse link shrouds

## Catalogue number structure

| Vertical fuse switch disconnector | NH Fuse link size | Mounting type | Poles | Terminal clamps details | Lateral busbar terminal |
|---|---|---|---|---|---|
| EBF | 00 | 2 = 100 mm busbar system | 30 = Three-pole | M1 = Screw terminals with M10 Screws | -L = Left side |
| | 2 | 3 = 185 mm busbar system | | S8 = Screw terminals with M8 Screws | - R = Right side |
| | 3 | | | V0 = V-terminals without V-clamps | |
| | | | | V1 = V-terminals with V-clamps | |
| | | | | W1 = 2-V Terminals with double V-clamps | |

Catalogue number **EBF00330S8** represents a vertical fuse rail, suitable for NH Fuse links size **00,** for 185 mm busbar system **3,** with 3 poles **30,** with screw terminals and M8 screws **S8**.

Example: EBF00330S8

| Ordering code information | Type designation | | | | |
|---|---|---|---|---|---|
| Product type | EBF | | | | |
| NH Fuse links size | | 00 | | | |
| Mounting type | | | 3 | | |
| Number of poles | | | | 30 | |
| Terminal clamps | | | | | S8 |
| Complete part numbers | EBF | 00 | 3 | 30 | S8 |

# EBF00 Vertical fuse rails, 100 mm busbar system

For 100 mm busbar system

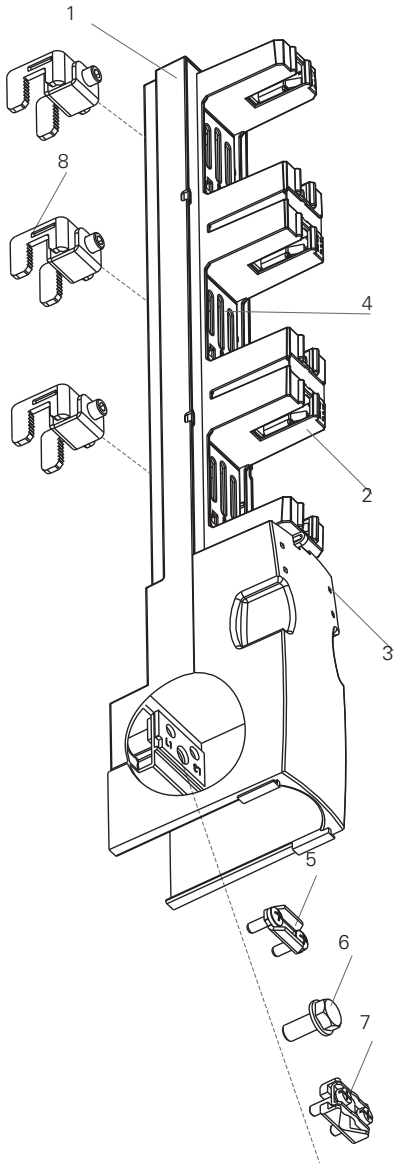


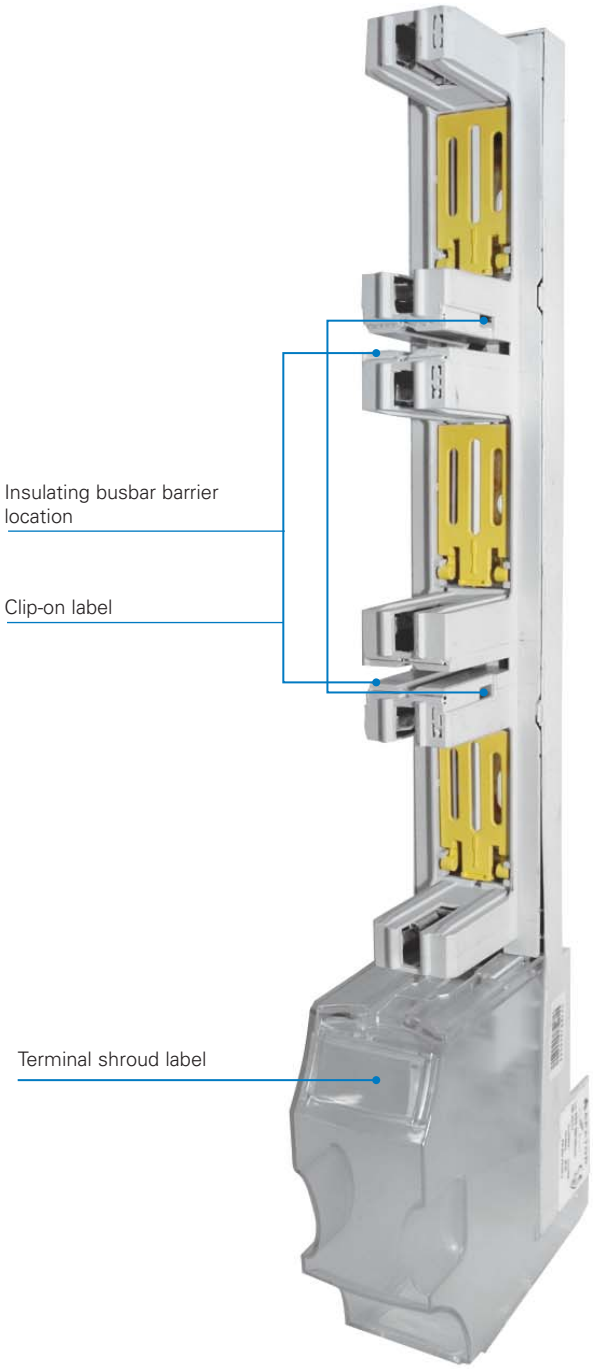


EBF00/100 mm
EBF00/100 mm-V

**Description**

1 - Main base
2 - protective contact cover
3 - Terminal shroud
4 - Busbar terminals access covers
5 - S-bridge clamp
6 - M8 screw
7 - V-shape clamp for sector-shaped conductor
8 - Hooked clamp

# EBF00 Vertical fuse rail, size 00, 160 A, 690 V a.c., 100 mm busbar system



## EBF00 Technical data

| | EBF00/100 mm |
|---|---|
| Size | 00 |
| Rated thermal current $I_{th}=I_n$ | 160 A |
| Rated voltage $U_n$ | 690 V a.c. |
| Rated insulation voltage $U_i$ | 1000 V a.c. |
| Rated frequency | 50-60 Hz |
| Rated power dissipation | 12 W |
| Rated short-circuit withstand current | 100 kA |
| Mechanical durability (number of cycles) | 100 |
| IP degree of protection (IP) | 00 |
| Compatible NH Fuse link body size | 00 |
| Accessories see page 17 | |

EBF00 / 100 mm

## EBF00 - Catalogue numbers

| 100 mm Busbar system | | Weight |
|---|---|---|
| EBF00230S8 | Cable terminals: bridge terminals with bridge clamps (S) 4-70 mm², screw terminals with M8 screws | 1,0 kg |
| EBF00230V1 | Cable terminals: V-terminals with V-clamps 25-120SW | 1,1 kg |
| EBF00230V0 | Cable terminals: V-terminals, without V-clamps | 1,0 kg |

## EBF00 - Terminal clamps details

| Description | | | | |
|---|---|---|---|---|
| Clamp | S-bridge clamp 2 x M5 x 25 | M8 screw* | V- clamp 25-120 SW | HM 10-120 |
| | | | | *** |
| Outline drawing | 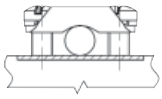 | 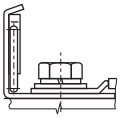 | 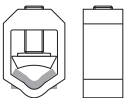 | |
| Cross–section of conductors | 4 - 70 mm² | Conductor with lug terminal max 185 mm² | re 16 mm² - 95 mm²<br>se 25 mm² - 120 mm²<br>rm 16 mm² - 95 mm²<br>sm 25 mm² - 120 mm² | re 10 mm² - 70 mm²<br>se 25 mm² - 120 mm²<br>rm 10 mm² - 70 mm²<br>sm 25 mm² - 95 mm² |
| Tightening torque | 3 Nm** | 12 Nm** | 20 Nm** | 15 Nm** |

For stranded conductors using cable ferrules is recommended
*) Busbar of maximum width of 20 mm and maximum thickness of 5 mm can be fixed to M-type screw terminals.
**) Using torque wrench is recommended
***) Fuse switch disconnectors with V-terminals are equipped with steel V-clamp HM 10-120 on request
Recommend using Eaton V-terminals only. Minimum tightening torque (M8 screw) for screws fixing fuse switch disconnector to busbar system –12 Nm, recommended tightening torque for screws and nuts with property class 8.8 – 21 Nm

# EBF00 Vertical fuse rail, size 00, 160 A, 690 V a.c., 185 mm busbar system



## EBF00 - Technical data

| Description | EBF00 |
|---|---|
| Size | 00 |
| Rated thermal current $I_{th}=I_n$ | 160 A |
| Rated voltage $U_n$ | 690 V a.c. |
| Rated insulation voltage $U_i$ | 1000 V a.c. |
| Rated frequency | 50-60 Hz |
| Rated power dissipation | 12 W |
| Rated short-circuit withstand current | 100 kA |
| Mechanical durability (number of cycles) | 100 |
| IP degree of protection (IP) | 00 |
| Compatible NH fuse link body size | 00 |
| Accessories see page 17 | |

EBF00 / 185 mm

## EBF00 - Catalogue numbers

| 185 mm busbar system | | Weight |
|---|---|---|
| EBF00330S8 | Cable terminals: bridge terminals with bridge clamps (S) 4-70 mm², screw terminals with M8 screws | 2 kg |
| EBF00330V1 | Cable terminals: V-terminals with V-clamps 25-120SW | 2.1 kg |
| EBF00330V0 | Cable terminals: V-terminals, without V-clamps | 2 kg |

## EBF00 - Terminal clamps details

| Description | EBF00 | | | |
|---|---|---|---|---|
| Clamp | S-bridge clamp 2 x M5 x 25 | M8 screw* | V- clamp 25-120 SW | HM 10-120 |
| | | | | *** |
| Outline drawing | 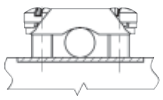 | 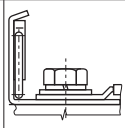 | 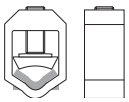 | |
| Cross-section of conductors | 4 - 70 mm² | Conductor with lug terminal max 185 mm² | re ● 16 mm² - 95 mm²<br>se ◆ 25 mm² - 120 mm²<br>rm ⊗ 16 mm² - 95 mm²<br>sm ⊗ 25 mm² - 120 mm² | re ● 10 mm² - 70 mm²<br>se ◆ 25 mm² - 120 mm²<br>rm ⊗ 10 mm² - 70 mm²<br>sm ⊗ 25 mm² - 95 mm² |
| Tightening torque | 3 Nm** | 12 Nm** | 20 Nm** | 15 Nm** |

For stranded conductors using cable ferrules is recommended
*) Busbar of maximum width of 20 mm and maximum thickness of 5 mm can be fixed to M-type screw terminals.
**) Using torque wrench is recommended
***) Fuse switch disconnectors with V-terminals are equipped with steel V-clamp HM 10-120 on request
Recommend using Eaton V-terminals only. Minimum tightening torque (M8 screw) for screws fixing fuse switch disconnector to busbar system –12 Nm, recommended tightening torque for screws and nuts with property class 8.8 – 21 Nm

# Vertical fuse rail, EBF2 size 2, 400 A and EBF3 size 3, 630 A, 690 V a.c., 185 mm busbar system

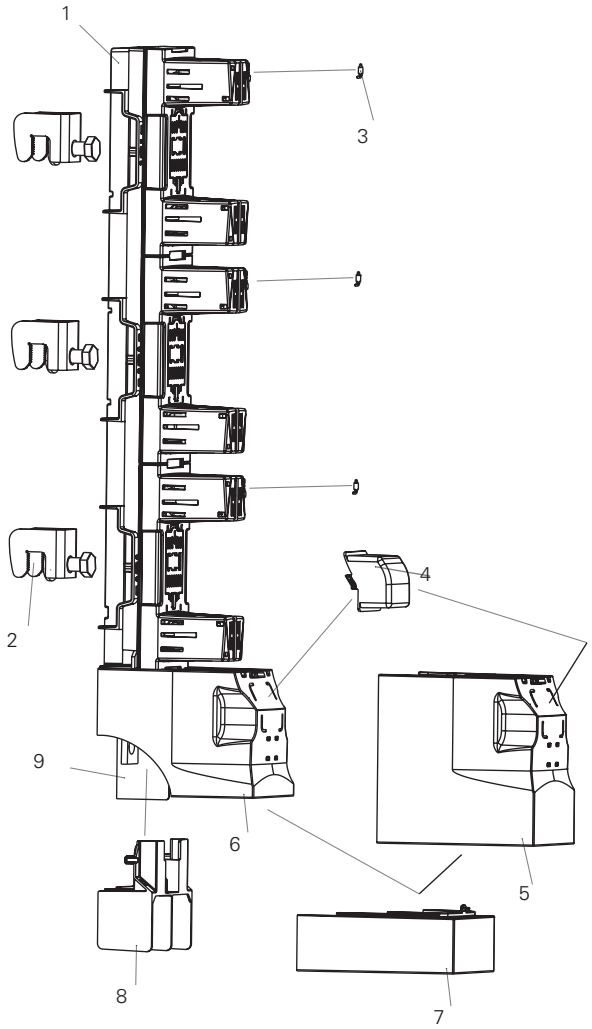


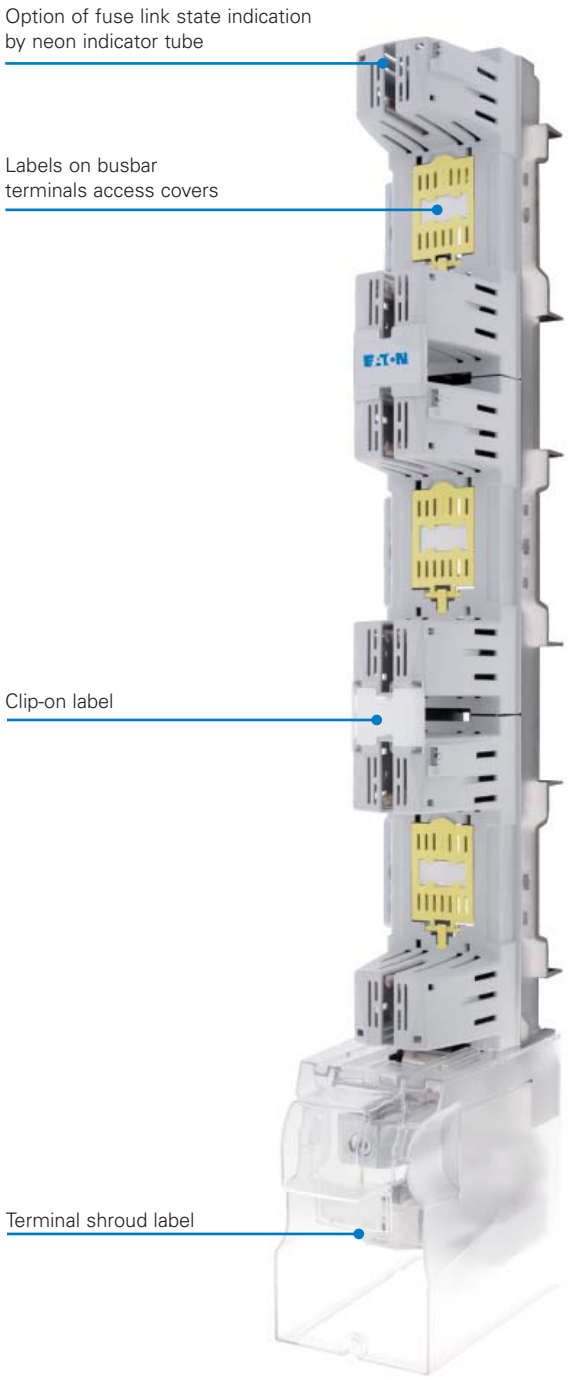


EBF2
EBF3

**Description**

1 - Main base

2 - Hooked clamp – for installation on busbar system

3 - Terminal shroud for fuse switch disconnector with double V-clamps (2 x 240 mm²)

4 - Terminal shroud (long)

5 - Terminal shroud (short)

6 - Bottom adjusting shroud

7 - Cable terminal protective cover

8 - Protective busbar barrier

# EBF2 Vertical fuse rail, size 2, 400 A, 690 V a.c., 185 mm busbar system

Fuse rail designed for operation with NH1 and NH2 fuse links



## EBF2 - Technical data

| Parameters | EBF2 |
|---|---|
| Size | 2 |
| Rated thermal current $I_{th}=I_n$ | 400 A |
| Rated voltage $U_n$ | 690 V a.c. |
| Rated insulation voltage $U_i$ | 1000 V a.c. |
| Rated frequency | 50-60 Hz |
| Rated power dissipation | 45 W |
| Rated short-circuit withstand current | 100 kA |
| Mechanical durability (number of cycles) | 100 |
| IP degree of protection (IP) | 20* |
| Compatible NH Fuse link body size | 1,2 |
| Accessories see page 18 | |

* With fuse link shrouds

EBF2

EBF2
with fuse link shrouds

## EBF2 - Catalogue numbers

| 185 mm busbar system | | Weight |
|---|---|---|
| EBF2330V1 | Cable terminals: V-terminals with V-clamps (35-240 mm²) | 3,2 kg |
| EBF2330M1 | Cable terminals: screw terminals with pressed nuts M10 (M10 screw) | 3,1 kg |
| EBF2330W1 | Cable terminals: 2V-terminals with double V-clamps (2 x 50- 240 mm²) | 3,8 kg |

## EBF2 - Terminal clamps details

| Description | EBF2 V-clamps | | EBF2 Double V-clamps | | EBF2 M10 screw |
|---|---|---|---|---|---|
| Clamp | V-clamp 35-300SW-B | | V-clamp HS 2/35-240-C | | M10 screw (pressed nut)* |
| Outline drawing | 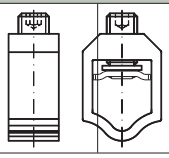 | | 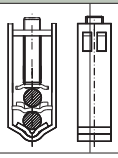 | | |
| Cross-section of conductors | V-clamp for direct fixing of conductor with busbar end with cross-section of: | | | | |
| | 35 - 185 mm² | 35 - 240 mm² | 35 - 185 mm² | 35 - 240 mm² | |
| | 35 - 240 mm² | 35 - 300 mm² | 35 - 240 mm² | 35 - 300 mm² | |
| Tightening torque | 30 Nm | | 40 Nm | | 32 Nm |

*For stranded conductors using cable ferrules is recommended
Busbar of maximum width of 40 mm and maximum thickness of 8 mm can be fixed to M-type screw terminals when protective busbar barrier between phases is installed.
Recommend using Eaton V-terminals only. Minimum tightening torque (M12 screw) for screws fixing fuse switch disconnector to busbar system – 32 Nm, recommended tightening torque for screws and nuts with property class 8.8 – 56 Nm

# EBF3 Vertical fuse rail, size 3, 630 A, 690 V a.c., 185 mm Busbar system



## EBF3 - Technical data

| Parameters | EBF3 |
|---|---|
| Size | 3 |
| Rated thermal current $I_{th}=I_n$ | 630 A |
| Rated voltage $U_n$ | 690 V a.c. |
| Rated insulation voltage $U_i$ | 1000 V a.c. |
| Rated frequency | 50-60 Hz |
| Rated power dissipation | 60 W |
| Rated short-circuit withstand current | 100 kA |
| Mechanical durability (number of cycles) | 100 |
| IP degree of protection (IP) | 20* |
| Compatible NH Fuse link body size | 3 |
| Accessories see page 18 | |

*With fuse link shrouds

EBF3

EBF3
with fuse link shrouds

## EBF3 - Catalogue numbers

| 185 mm busbar system | | Weight |
|---|---|---|
| EBF3330V1 | Cable terminals: V-terminals with V-clamps (70-300 SW) | 4,0 kg |
| EBF3330M1 | Cable terminals: screw terminals with pressed nuts M10 (M10 screw) | 4,1 kg |
| EBF3330W1 | Cable terminals: 2V-terminals with double V-clamps (2 x 50- 240 mm²) | 4,8 kg |

## EBF3 - Terminal clamps details

| Description | EBF3 V-clamps | | EBF3 Double V-clamps | | EBF3 M10 screw |
|---|---|---|---|---|---|
| Clamp | V-clamp 35-300SW-B | | V-clamp HS 2/35-240-C | | M10 screw (pressed nut)* |
| Outline drawing | 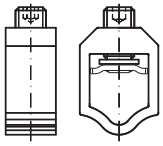 | | 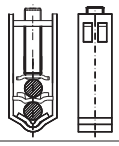 | | |
| Cross-section of conductors | V-clamp for direct fixing of conductor with busbar end with cross-section of: | | | | |
| | 35 - 185 mm² | 35 - 240 mm² | 35 - 185 mm² | 35 - 240 mm² | |
| | 35 - 240 mm² | 35 - 300 mm² | 35 - 240 mm² | 35 - 300 mm² | |
| Tightening torque | 30 Nm | | 40 Nm | | 56 Nm |

*For stranded conductors using cable ferrules is recommended
Busbar of maximum width of 40 mm and maximum thickness of 8 mm can be fixed to M-type screw terminals when protective busbar barrier between phases is installed.
Recommend using Eaton V-terminals only. Minimum tightening torque (M12 screw) for screws fixing fuse switch disconnector to busbar system – 32 Nm, recommended tightening torque for screws and nuts with property class 8.8 – 56 Nm

# EBF2 and EBF3 Fuse rail, 185 mm busbar system, with lateral busbar terminal*



## EBF Fuse rail with lateral busbar terminal technical data

| Parameters | EBF2 | EBF3 |
|---|---|---|
| Size | 2 | 3 |
| Rated thermal current $I_{th}=I_n$ | 400 A | 630 A |
| Rated voltage $U_n$ | 690 V a.c. | 690 V a.c |
| Rated insulation voltage $U_i$ | 1000 V a.c. | 1000 V a.c. |
| Rated frequency | 50-60 Hz | 50-60 Hz |
| Rated power dissipation | 45 W | 60 W |
| Rated short-circuit withstand current | 100 kA | 100 kA |
| Mechanical durability (Number of cycles) | 100 | 100 |
| IP degree of protection (IP) | 20* | 20* |
| Compatible NH Fuse link body size | 2 | 3 |
| Accessories see page 18 | | |

*With fuse link covers

EBF2 with lateral busbar terminal - Right

EBF3 with lateral busbar terminal - Left

## EBF2 and 3 - Catalogue numbers

| 185 mm busbar system | | Weight |
|---|---|---|
| EBF2330-L | Size 2 Lateral busbar terminal - left side | 2,2 kg |
| EBF2330-R | Size 2 Lateral busbar terminal - right side | 2,2 kg |
| EBF3330-L | Size 3 Lateral busbar terminal - left side | 3 kg |
| EBF3330-R | Size 3 Lateral busbar terminal - right side | 3 kg |

## EBF (with lateral busbar terminal) - Terminal clamps details

| Description | Outline drawing | EBF2 Left side | EBF2 Right side | EBF3 Left side | EBF3 Right side |
|---|---|---|---|---|---|
| Clamp | | M12 screw | M12 screw | M12 screw | M12 screw |
| Cable terminal | | Left side | Right side | Left side | Right side |
| Tightening torque | | 56 Nm | 56 Nm | 56 Nm | 56 Nm |

*Available upon request. Please contact Eaton's application engineering department for further details: buletechnical@eaton.com

# EBF Vertical fuse rails - Outline drawings (mm)

**EBF00 / 100 mm busbar system**

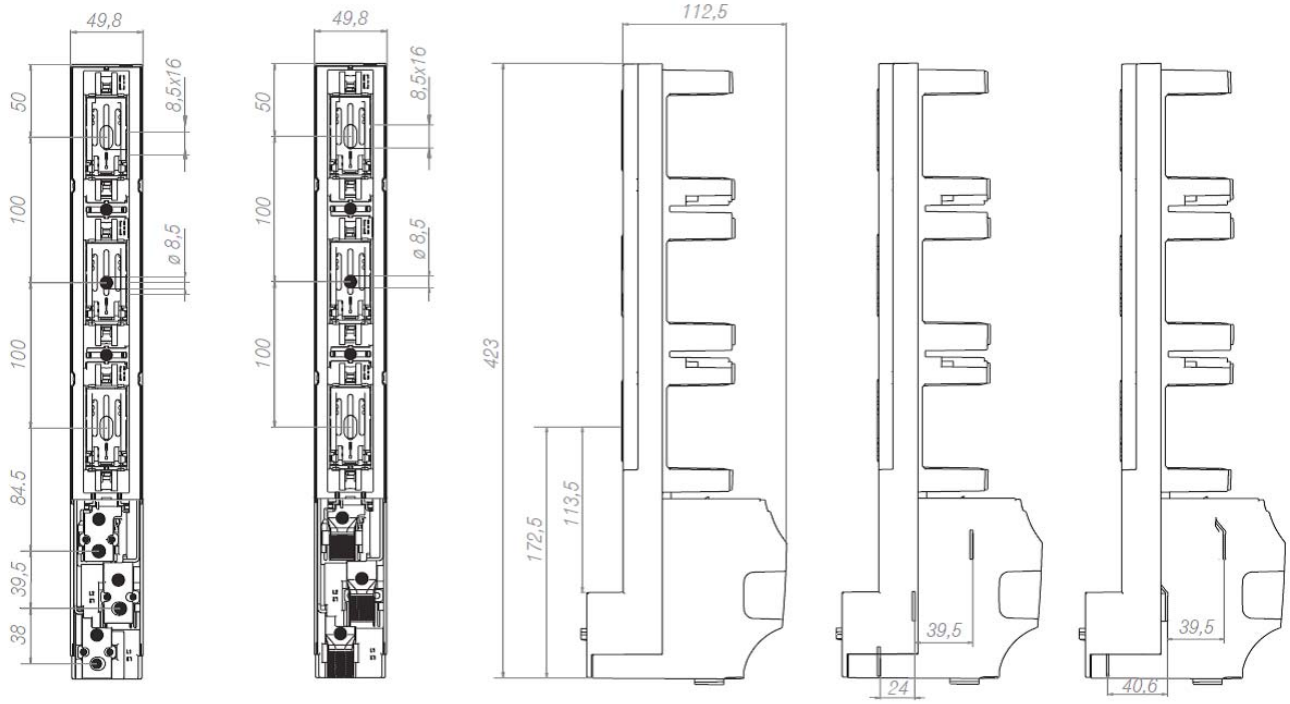


M8 Screws

V-Terminals

M8 Screws side view

V-Terminals side view

**EBF00 / 185 mm busbar system**

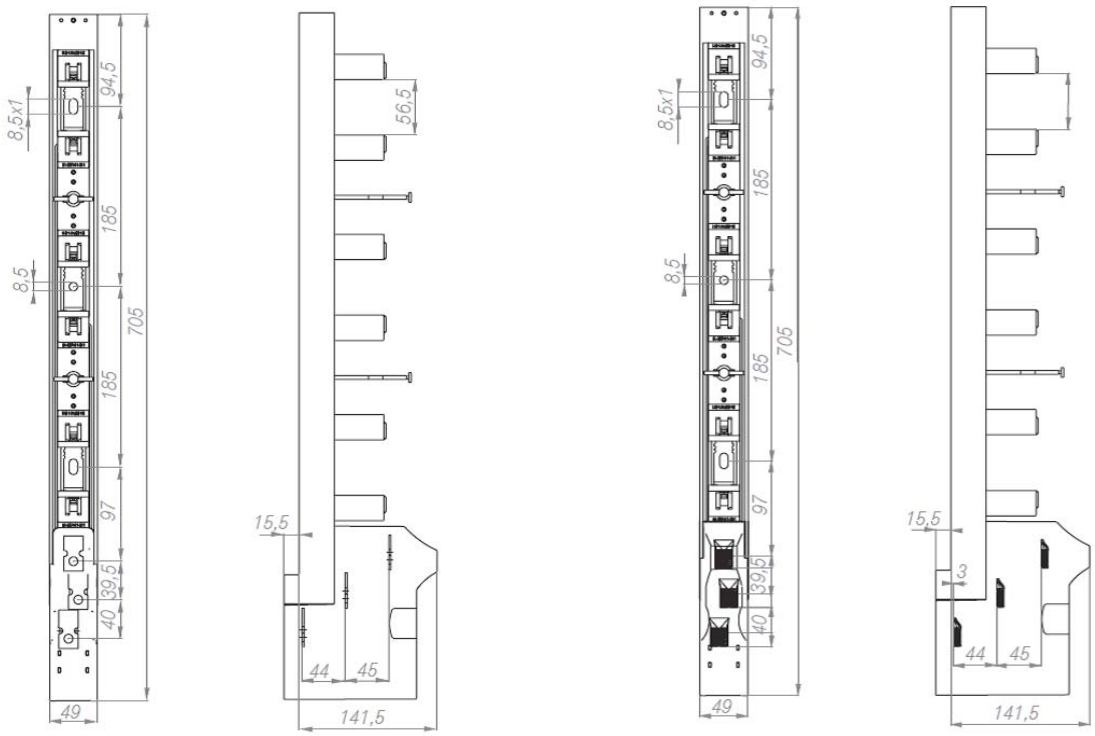


M8 Screws

V-Terminals

# EBF Vertical fuse rails - Outline drawings (mm)

**EBF2 and 3**

EBF2 and 3

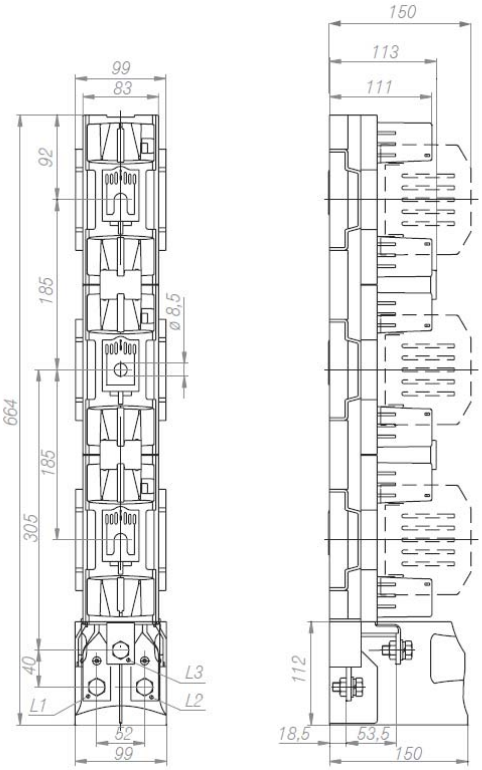


EBF2 and 3 With terminals 2V (2 x 240 mm²)

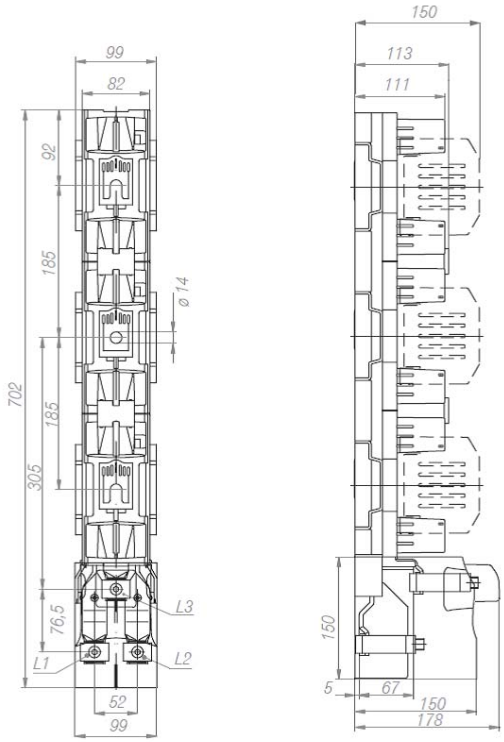

# EBF Vertical fuse rail - Accessories



## EBF00, EBF00 / 100 mm

### EBFVA1 - M8 Terminal screw

M8 terminal screw, for connection of conductors with lug terminal (set - 3pcs)

### EBFVA2 - Busbar shroud

Busbar shroud (polycarbonate) for busbar system 185 mm, Width 50 mm, length 562 mm, thickness 3 mm



### EBFVA3 - Hooked clamps

Hooked clamps for installation of EBF on busbar system without drilled holes. (set - 3 pcs.)

### EBFVA4 - Isolating pin

Isolating pin for fixing the 50 mm busbar shroud, M8 (set – 2 pcs.)

### EBFVA6 - S-Bridge clamp

S-Bridge clamp – fixed with 2 x M5 screw - for connection of conductors with cross-section 4 mm² up to 70 mm² (set – 3 pcs.)

### EBFVA7 - V-shape clamp

V-shape clamp – S-bridge clamp + V-shape saddle - for connection of sector-shaped conductors with cross-section 1.5 up to 70 mm² (stranded) or 95 mm² (solid) (1 set - 3 pcs.)

### EBFVA8 - Universal earthing device

Universal earthing device for EBF00, 2, 3

### EBFVA9 - V-clamp

V- clamp HM-10-120. For connection of conductor with cross-section:

| | | | |
|---|---|---|---|
| 10 - 70 mm² | ● | 10 - 70 mm² | ⊗ |
| 25 - 120 mm² | ◆ | 25 - 95 mm² | ⬙ |

## EBF00 / 100 mm

### EBFVA10 - Terminal shroud/adjusting shroud

Terminal shroud/adjusting shroud

### EBFVA11 - Single adaptor

Single adaptor 100/185 enabling to install EBF 00/100 mm on busbar system 185 mm

### EBFVA12 - Double adaptor

Double adaptor 100/185 enabling to install two EBF 00/100mm units on busbar system 185 mm

### EBFVA13 - Insulating busbar barrier

Insulating busbar barrier for EBF 00/100 mm

## EBF00

### EBFVA14 - Double distance adaptor

Double distance adaptor 185/185. Designed for two EBF 00 units. It adjusts front line of EBV 00 to that of EBV 1, 2, 3 (set – 3 pcs.)

### EBFVA15 - Single distance adaptor

Single distance adaptor 185/185. It adjusts front line of EBF 00 to that of EBV 1, 2, 3 (set – 3 pcs.)

### EBFVA16 - Terminal shroud

Terminal shroud

# EBF Vertical fuse rail - Accessories

## EBF2, EBF3

### Terminal screw

For connection of conductors with lug terminal (1 set - 3pcs)

EBFVA17 - M10 terminal screw for EBF2

EBFVA18 - M12 terminal screw for EBF3

### EBFVA19 - V-clamp

V-clamp. For connection of conductor with cross-section:

35 - 120 mm² 35 - 150 mm²

35 - 240 mm² 35 - 300 mm²

### EBFVA20 - V-clamp

V-clamp. For connection of conductor with cross-section:

35 - 185 mm² 35 - 240mm²

35 - 240 mm² 35 - 300 mm²

### EBFVA21 - Double V-clamp

Double V-clamp. For connection of two conductors with cross-section:

35 - 185 mm² 35 - 240 mm²

35 - 240 mm² 35 - 300 mm²

### EBFVA22 - V-terminal lug

V-terminal lug for V-clamp for connection of conductors with cross-section 35 mm² up to 240 mm²

### EBFVA23 - V-clamp HS

V-clamp HS (steel) for connection of two conductors with cross-section

35 - 135 mm² 35 - 240 mm²

35 - 240 mm² 35 - 300 mm²

### EBFVA24 - Hooked clamps

Hooked clamps for installation of EBF, 2, 3 on busbar system without drilled holes (set - 3 pcs.)

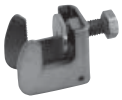

## EBF2, EBF3

### EBFVA25 - Busbar shroud

Busbar shroud (polycarbonate) for busbar system 185 mm, Width 100 mm, length 707 mm, thickness 2 mm

### EBFVA26 - Isolating pin

Isolating pin for fixing the 100mm busbar shroud, M12 (set – 2 pcs.)

### EBFVA27 - Terminal shroud

Terminal shroud

### EBFVA28 - Extended terminal shroud

Extended terminal shroud. For use with terminal shroud EBFVA27

### EBFVA29 - Terminal protective cover

Terminal protective cover

### EBFVA31 - Fuse link shroud

Fuse link shroud

### EBFVA8 - Universal earthing device

Universal earthing device for EBV 00, 2, 3

# EBH

## Horizontal fuse switch disconnectors

Designed for distribution of electricity and protection of electrical equipment against short-circuits and overloads with industrial fuse links.


| | |
|---|---|
| EBH Introduction | 20 |
| EBH Technical data | 21 |
| EBH Catalogue numbers structure | 22 |
| EBH000 | 23-24 |
| EBC000 Compact size 000 | 25-27 |
| EBH00 Mounting plate installation | 28-29 |
| EBH00 60 mm busbar system | 30-32 |
| EBH00 Features and benefits | 33-34 |
| EBH1 | 35-37 |
| EBH2 | 38-39 |
| EBH3 | 40 |
| Fuse switch disconnector electronic fuse monitoring module | 41 |
| Outline drawings | 42-51 |
| Accessories | 52 |

## Applications

EBH Horizontal fuse switch disconnectors are designed for distribution of electricity and protection of electrical equipment against short-circuits and overloads with industrial fuse links. They are conforming to IEC 60947-1 and IEC 60947-3 standards. They are intended for installation in low voltage distribution boards, cable and metering cabinets.

## Sizes

EBH Horizontal fuse switch disconnectors are available in the following sizes:

- 000 (160 A)
- 00 (160 A)
- 1 (250 A)
- 2 (400 A)
- 3 (630 A)



## Construction

Thermoplastic parts of EBH Horizontal fuse switch disconnectors are made of fibre glass strengthened polyamide with halogen free flame retardant added and have the highest possible flammability class – V0.

EBH Horizontal fuse switch disconnectors consist of following parts:

- Three pole main base with spring-loaded contacts designed for connection of circular or sector-shaped conductors; conductors with lug terminals or busbar
- Removable cover with fuse links,

Arc chutes with steel deionization plates over top contacts,

Silver plated contacts providing low power loss.

The making and breaking operations has to be done with adequate force since these are manually operated switches

Flexibility to terminate circular or sector-shaped busbar conductors for V-clamps or double V-clamps terminals. Conductors with lugs can be terminated with screw terminals

Voltage test can be performed through test holes in fuse link cover

Monitoring of the fuse link status possible with electronic module

## Mounting

On mounting plate

- EBH00 , EBH1 , EBH2 , EBH3

On double DIN-Rail

- EBH00

On busbar systems:

- 60 mm busbar system
- EBH00, EBH1, EBH2 – installation on busbar system with hooked clamps
- 100 mm busbar system
- EBH2, EBH1 – installation on busbar system with hooked clamps

## Operating conditions

- To be installed in a room free of any dust, aggressive or explosive gases
- Altitude up to 2000 meters above sea level
- Outdoor – in cabinets with protection degree > IP 34
- Ambient temperature from -25 °C to +55 °C
- Relative humidity of the air should not be higher than 50 percent at temperature of +40°

# Technical data

| | EBH000 | | | | | EBH00 | | | EBH1 | | EBH1 Busbar system installation | | | EBH2 | | | EBH3 | |
|---|---|---|---|---|---|---|---|---|---|---|---|---|---|---|---|---|---|---|
| Rated thermal current $I_{th}$ [1] | 160 A | | | | | 160 A | | | 250 A | | 250 A | | | 400 A | | | 630 A | |
| Rated voltage $U_n$ | 690 V a.c. | | | | | 690 V a.c. | | | 690 V a.c. | | 690 V a.c. | | | 690 V a.c. | | | 690 V a.c. | |
| Utilisation category | AC-23B | AC-22B | AC-22B | AC-21B | DC-21B | AC-23B | DC-21B | DC-22B | AC-23B | DC-22B | AC-23B | AC-22B | DC-22B[2] | AC-23B | DC-21B | DC-22B | AC-22B | DC-21B |
| Rated switching current $I_e$ | 100 A | 100 A | 160 A | 160 A | 160 A | 160 A | 160 A | 160 A | 250 A | 250 A | 250 A | 250 A | 250 A | 400 A | 400 A | 400 A | 630 A | 630 A |
| Rated switching voltage $U_e$ | 400 V a.c. | 690 V a.c. | 400 V a.c. | 690 V a.c. | 250 V a.c. | 690 V a.c. | 440 V a.c. | 250 V a.c. | 690 V a.c. | 250 V a.c. | 400 V a.c. | 690 V a.c. | 250 V a.c. | 690 V a.c. | 440 V a.c. | 220 V a.c. | 690 V a.c. | 250 V a.c. |
| Rated short circuit making current | 100 kA (400 and 690 V a.c.) | | | | 15 kA (400 & 690 V a.c.) | 80 kA (690 V a.c.)<br>100 kA (400 V a.c.) | 20 kA (400 & 690 V a.c.) | | 80 kA (690 V a.c.)<br>100 kA (400 V a.c.) | 25 kA (400 V & 690 V a.c.) | 80 kA (690 V a.c.)<br>100 kA (400 V a.c.) | | 25 kA (400 & 690 V a.c.) | 80 kA (690 V a.c.)<br>100 kA (400 V a.c.) | 15 kA (400 & 690 V a.c.) | 20 kA (400 .& 690 V a.c.) | 100 kA (400 & 690 V a.c.) | |
| Rated short circuit withstand current | 25 kA (400 and 690 V a.c.) | | | | 15 kA (400 & 690 V a.c.) | 80 kA (690 V a.c.)<br>100 kA (400 V a.c.) | 20 kA (400 & 690 V a.c.) | | 80 kA (690 V a.c.)<br>100 kA (400 V a.c.) | 25 kA (400 & 690 V a.c.) | 80 kA (690 V a.c.)<br>100 kA (400 V a.c.) | | 25 kA (400 & 690 V a.c.) | 80 kA (690 V a.c.)<br>100 kA (400 V a.c.) | | | 25 kA (400 & 690 V a.c.) | |
| Rated insulation voltage $U_i$ | 1000 V | | | | | 1000 V | | | 1000 V | | 1000 V | | | 1000 V | | | 1000 V | |
| Rated power dissipation | 12 W | | | | | 12 W | | | 32 W | | 32 W | | | 34 W | | | 60 W | |
| Rated impulse withstand voltage $U_{imp.}$ | 8 kV | | | | | 8 kV | | | 8 kV | 8 kV | 8 kV | | | 12 kV | | | 12 kV | |
| Rated frequency | 50-60 Hz | | | | - | 50-60 Hz | - | | 50-60 Hz | - | 50-60 Hz | | - | 50-60 Hz | - | | 50-60 Hz | - |
| Mechanical durability (number of cycles) | 2000 | | | | | 1600 | | | 1600 | | 1600 | | | 1000 | | | 1000 | |
| Electrical durability (number of cycles) | 300 | | | | | 200 | | | 200 | | 200 | | | 200 | | | 200 | |
| IP degree of protection (IP) | 20 | | | | | 20 | | | 30 | | 30 | | | 20 | | | 20 | |
| Weight | ~0.6 / ~0.9 kg | | | | | ~0.7 / ~0.9 kg | | | ~2 kg | | ~2,5 kg | | | ~3 / ~4.5 kg | | | ~5 / ~5.9 kg | |
| Compatible NH Fuse link body size | 000 | | | | | 00 | | | 1 | | 1 | | | 2 | | | 3 | |

[1] $I_{th}$ - thermal current of fuse switch disconnector without external enclosure, installed outdoors (In case of the installation of fuse switch disconnectors in enclosures then load factor should be considered)
[2] for 60 mm busbar system

EBH2 switch disconnector with solid links can be used for 400 A

- Rated short-time withstand current 1s $I_{cw}$ = 13 kA
- Rated short-circuit making capacity $I_{cm}$ = 8 kA

# Catalogue number structure

| Horizontal fuse switch disconnector | NH Fuse link size | Mounting type | Poles | Switching type | Connection type | Terminal clamps details | Installation |
|---|---|---|---|---|---|---|---|
| EBH | 000<br>00<br>1<br>2<br>3 | O = Mounting plate installation<br>1 = 60 mm busbar system<br>2 = 100 mm busbar system | 3 = 3-pole | S = Each phase switching separately<br>T = Simultaneous 3 phase switching | B = Bottom cable terminal connection with lug terminals<br>T = Top cable terminal connection with lug terminals | F = Busbar ends<br>M2 = Screw terminals with M12 screws<br>M8 = Screw terminals with M8 scews<br>M1 = Conductors with lug terminals with M10 screws<br>MV = Screw terminals / V-clamps<br>S5 = S-Bridge clamps with M5 screws<br>S8 = Screw terminals with M8 Screws<br>SV = S-bridge clamps / V-clamps<br>V1 = V-shape clamps<br>VS= V clamps / S-bridge clamps<br>VM = V clamps / Screw terminals<br>W1 = Double V-Clamps | -D = installation on DIN-Rail<br>L = Lengthened terminal shrouds<br>- E, -TE, -BE Electronic fuse monitoring module, see details page 41 |

Miscellaneous parts: EBC000: Compact fuse switch disconnector size 000 see details pages 25-27

Catalogue number **EBH00O3TS5** represents a horizontal fuse switch disconnector, suitable for NH Fuse link size **00,** mounting plate installation **O,** 3-pole **3,** simultaneous 3 phase switching **T**, with S-bridge clamps, M5 screws **S5**.

Example: EBH00O3TS5

| Ordering code information | Type designation | | | | | |
|---|---|---|---|---|---|---|
| Product type | EBH | | | | | |
| NH Fuse link size | | 00 | | | | |
| Mounting type | | | O | | | |
| Number of poles | | | | 3 | | |
| Simultaneous or separate switching | | | | | T | |
| Terminal clamps | | | | | | S5 |
| Complete part numbers | EBH | 00 | O | 3 | T | S5 |

# EBH000 Horizontal fuse switch disconnectors, size 000, 160 A and 690 V a.c.

## EBH000 - Technical data

| Parameters | EBH000 | | | |
|---|---|---|---|---|
| Rated thermal current $I_{th}=I_n$ | 100/160 A | | | |
| Rated voltage $U_n$ | 690 V a.c. | | | |
| Utilisation category | AC-23B | AC-22B | AC-21B | DC-21B |
| Rated switching voltage $U_e$ | 400 V a.c. | 400 V a.c. | 690 V a.c. | 250 V a.c. |
| Rated switching current $I_e$ | 100 A | 100 A | 100 A | 160 A |
| Rated short circuit making current | 25 kA | | | |
| Rated short circuit withstand current | 100 kA | | | |
| Rated insulation voltage $U_i$ | 1000 V | | | |
| Rated impulse withstand voltage $U_{imp}$ | 8 kV | | | |
| Rated power dissipation | 12 W | | | |
| Rated frequency | 50-60 Hz | | | - |
| Mechanical durability (number of cycles) | 2000 | | | |
| Electrical durability (number of cycles) | 300 | | | |
| IP degree of protection (IP) | IP 20 | | | |
| Compatible NH Fuse link body size | 000 | | | |
| Accessories see page 52 | | | | |

EBH000
for installation on mounting plate

## EBH000 - Catalogue numbers

| Installation on mounting plate | | Cable terminal |
|---|---|---|
| EBH000O3TS5 | For connection of round conductors | S-bridge clamps |
| EBH000O3TS5-D | For connection of round conductors, possible installation on DIN-Rail | S-bridge clamps |
| EBH000O3TM8 | For connection of round conductors with lug terminals | M8 screws |
| EBH000O3TM8-D | For connection of round conductors with lug terminals, possible installation on DIN-Rail | M8 screws |
| EBH000O3TS5L | For connection of round conductors,lengthened terminal shrouds | S-bridge clamps |
| EBH000O3TM8L | For connection of round conductors with lug terminals, lengthened terminal shrouds | M8 screws |
| **60 mm busbar system** | | **Cable terminal** |
| EBH00013TBS5 | Cable terminal – bottom, for connection of round conductors | S-bridge clamps |
| EBH00013TTS5 | Cable terminal – top, for connection of round conductors | S-bridge clamps |
| EBH00013TBM8 | Cable terminal – bottom, for connection of conductors with lug terminals | M8 screws |
| EBH00013TTM8 | Cable terminal – top, for connection of conductors with lug terminals | M8 screws |

# EBH000, Horizontal fuse switch disconnectors, size 000, 160 A and 690 V a.c.

## EBH000 - Terminal clamps details

| Description | Clamp | Drawing of clamp | Cross-section of conductors | Cu busbar | Tightening torque | Dimensions and spacing of holes for installation of EBH000 on mounting plate |
|---|---|---|---|---|---|---|
| EBH000 | S-bridge clamp 2 x M5 x 16 | 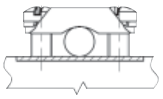 | Cu/Al conductor 1,5 - 35 mm² | maximum busbar width 15 mm | 3 Nm* | 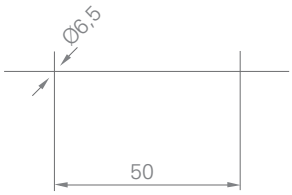  |
| | M8 x 16 screw | 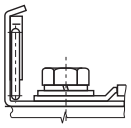 | conductor with lug terminal up to 70 mm² | maximum busbar width 15 mm | 10 Nm* | |

For stranded conductors using cable ferrules is recommended
*Using of torque wrench is recommended

EBH000
for mounting on DIN-Rail

EBH000 for installation on mounting plate
with double terminal shrouds

EBH000
for installation on mounting plate
with single terminal shrouds

EBH000 for installation on 60 mm busbar system

# Compact EBC000 Horizontal fuse switch disconnectors 125 A, 690 V a.c. for mounting on plate and on double DIN-Rail and for installation on 60 mm busbar system*

Compact dimensions - consume half the space

Protective covers provide touch protection

Built-in hooked clamps provide fast installation on busbar system

Top/bottom cable terminal

## EBC000 - Technical data

| Description | EBC000 | | | |
|---|---|---|---|---|
| Rated thermal current $I_{th}$ | 125 A | | | |
| Rated voltage $U_n$ | 690 V a.c. | | | |
| Utilisation category | AC-21B** | AC-22B*** | AC-23B | DC-22B |
| Rated switching voltage $U_e$ | 690 V a.c. | 690 V a.c. | 400 V a.c. | 250 V a.c. |
| Rated switching current $I_e$ | 125 A | 125 A | 125 A | 100 A |
| Rated short circuit making current | 50*/35** kA (690 V a.c.) | | | 20 kA (400, 500 & 690 V a.c.) |
| | 50 kA (500 V a.c.) | | | |
| | 80 kA (400 V a.c.) | | | |
| Rated short circuit withstand current | 80 kA (400, 500 & 690 V a.c.) | | | 20 kA (400, 500 & 690 V a.c.) |
| Rated insulation voltage $U_i$ | 1000 V | | | |
| Rated impulse withstand voltage $U_{imp}$ | 6 kV | | | |
| Rated power dissipation | 9 W | | | |
| Rated frequency | 50-60 Hz | | | - |
| Mechanical durability (number of cycles) | 1600 | | | |
| Electrical durability (number of cycles) | 200 | | | |
| IP degree of protection | IP 30 | | | |
| Compatible NH Fuse link body size | 000 | | | |

*- EBH 000 , ***- EBH 000 -S

EBC000

EBH

## EBC000 - Catalogue numbers

| Installation on mounting plate | | Cable terminal |
|---|---|---|
| EBC00003TF | For connection of round conductors | Frame clamps |
| **Installation on double DIN-Rail** | | **Cable terminal** |
| EBC0003TF-D125 | Double DIN-Rail with spacing of 125 mm | Frame clamps |
| EBC0003TF-D150 | Double DIN-Rail with spacing of 150 mm | Frame clamps |
| **60 mm busbar system** | | **Cable terminal** |
| EBC00013TTF | Cable terminal-top, for connection of conductors with busbar ends | Frame clamps |
| EBC00013TBF | Cable terminal-bottom, for connection of conductors with busbar ends | Frame clamps |

## EBC000 - Terminal clamps details

| Description | Cable terminal | Drawing of clamp | Cross-section of conductors | Tightening torque |
|---|---|---|---|---|
| EBC000 | Frame clamps | | 2,5 - 50 mm² | 6 Nm 3 Nm**** |

For stranded conductors using cable ferrules is recommended
****Using of torque wrench is recommended

* EBC Available upon request. Please contact Eaton's application engineering department for further details: buletechnical@eaton.com

## Save space in the switchboard with EBC000*

EBC000 -S (EBC000 ) width dimensions is equal to half the width of EBH00 -S (EBH00 ), so we can install more disconnectors (keeping a certain width of the switchboard) to protect individual circuits in the switchboard.

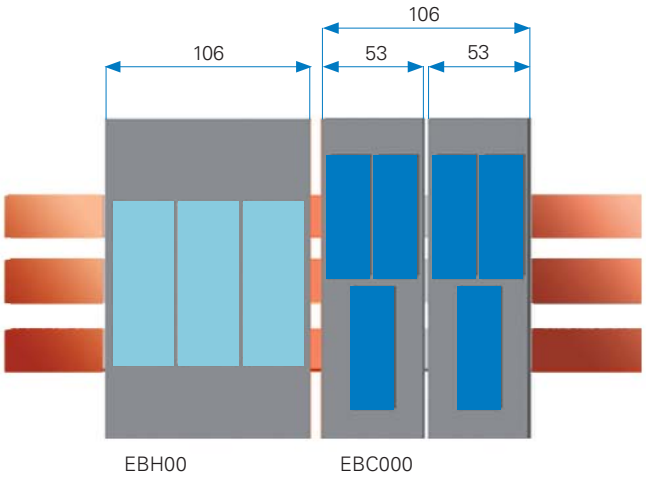


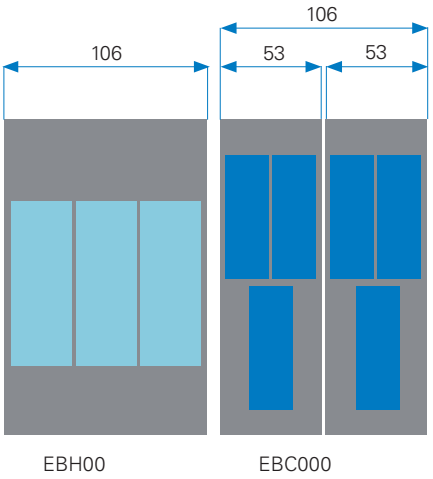


Fuse switch disconnectors EBC000 are designed for installation of distribution board's protective panels at two depths: covering system at 70 mm depth: covering system at 32 mm and 70 mm depth

**Covering system at 32 mm depth**

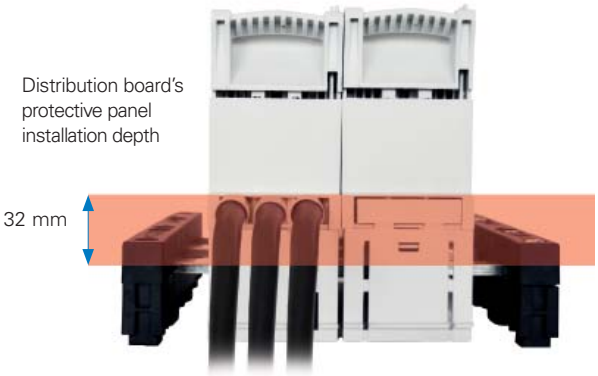


**Covering system at 70 mm depth**

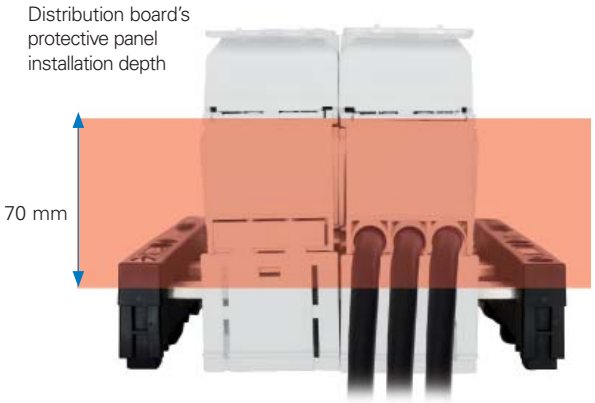

With cables connected to the top cable terminal EBC000

Fuse switch disconnectors EBC000 are manufactured in two versions depending on type of cable terminal

- With bottom cable terminal
- With top cable terminal

With cables connected to the bottom cable terminal EBC000

*EBC Available upon request. Please contact Eaton's application engineering department for further details: buletechnical@eaton.com

# Compact EBC000 Horizontal fuse switch disconnector - Installation details*

Fuse switch disconnector EBC000 suitable for busbar systems has a special cavity.

It is possible to install microswitch indicating position open/close fuse switch disconnectors.

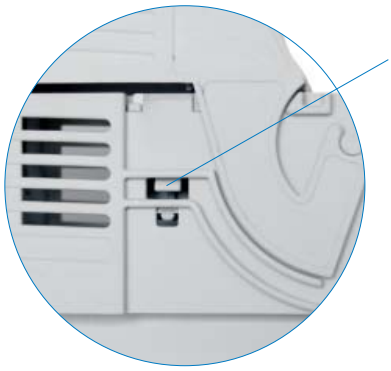

Fuse switch disconnector EBC000
for mounting on double DIN-Rail

EBC000
mounting on plate

*EBC Available upon request. Please contact Eaton's application engineering department for further details: buletechnical@eaton.com

# EBH00 Horizontal fuse switch disconnectors, size 00, 160 A, 690 V a.c.

## EBH00 - Technical data

| Description | | EBH00 | | |
|---|---|---|---|---|
| Rated thermal current $I_{th}$ | | 160 A | | |
| Rated voltage $U_n$ | | 690 V a.c. | | |
| Utilisation category | | AC-23B | DC-22B | DC-21B |
| Rated switching voltage $U_e$ | | 690 V a.c. | 250 V a.c. | 440 V a.c. |
| Rated switching current $I_e$ | | 160 A | 160 A | 160 A |
| Rated short circuit making current | 690 V a.c. | 80 kA (690 V a.c.) | 20 kA (400 & 690 V a.c.) | |
| | 400 V a.c. | 100 kA (400 V a.c.) | | |
| Rated short circuit withstand current | 690 V a.c. | 80 kA (690 V a.c.) | 20 kA (400 & 690 V a.c.) | |
| | 400 V a.c. | 100 kA (400 V a.c.) | | |
| Rated insulation voltage $U_i$ | | 1000 V | | |
| Rated impulse withstand voltage $U_{imp}$ | | 8 kA | | |
| Rated power dissipation | | 12 W | | |
| Rated frequency | | 50-60 Hz | - | |
| Mechanical durability (number of cycles) | | 1600 | | |
| Electrical durability (number of cycles) | | 200 | | |
| IP degree of protection | | IP 20 | | |
| Compatible NH Fuse link body size | | 00 | | |
| Accessories see page 52 | | | | |

EBH00

## EBH00 - Catalogue numbers

| Installation on mounting plate | | Cable terminal |
|---|---|---|
| EBH00O3TS5 | For connection of round conductors | S-bridge clamps |
| EBH00O3TM8 | For connection of conductors with lug terminals | M8 screws |
| EBH00O3TV1 | For connection of sector-shaped conductors | V-shape clamps |
| EBH00O3TS5L | For connection of round conductors, lengthened terminal shrouds | S-bridge clamps |
| EBH00O3TM8L | For connection of conductors with lug terminals, lengthened terminal shrouds | M8 screws |
| EBHOO03TV1L | For connection of sector-shaped conductors, lengthened terminal shrouds | V -shape clamps |

Double DIN-Rail options available, please contact buletechnical@eaton.com for further details-

# EBH00 Horizontal fuse switch disconnectors, size 00, 160 A, 690 V a.c.

## EBH00 - Terminal clamps details

| Description | Clamp | Drawing of clamps | Cross-section of conductors | Cu Busbar | Tightening torque | Dimensions and spacing of holes for installation of EBH 00 on mounting plate |
|---|---|---|---|---|---|---|
| EBH00 | S-bridge clamp 2 x M5 x 16 | 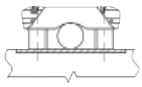 | Cu/Al conductor 4 - 50 mm² | Maximum busbar width 20 mm | 3 Nm* | 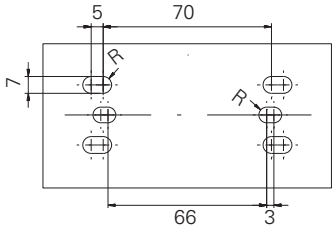  |
| | M8 x 16 screw | 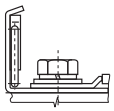 | conductor with lug terminal up to 70 mm² | Maximum busbar width 20 mm | 10 Nm* | |
| | V-shape clamp 2 x M5 x 20 | 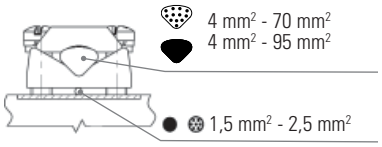  | | Maximum busbar width 20 mm | 3 Nm* | |

For stranded conductors using cable ferrules is recommended
*Using of torque wrench is recommended

EBH00

Fuse switch disconnector EBH00
with additional terminal shrouds

Fuse switch disconnector EBH00
for mounting on double DIN-Rail*

*please contact buletechnical@eaton.com for further details.

# EBH00 Horizontal fuse switch disconnectors, size 00, 160 A, 690 V a.c., 60 mm busbar system

System of protective covers provides touch protection

Possible installation of distribution board's protective panel at depth of 32 mm or 70 mm

Built-in hooked clamps provide fast installation onto busbar system

Top/bottom cable terminal

EBH

## EBH00 - Technical data

| Description | EBH0013T | | |
|---|---|---|---|
| Rated thermal current $I_{th}$ | 160 A | | |
| Rated voltage $U_n$ | 690 V a.c. | | |
| Utilisation category | AC-23B | AC-22B | DC-22B |
| Rated switching voltage $U_e$ | 400 V a.c. | 690 V a.c. | 250 V a.c. |
| Rated switching current $I_e$ | 160 A | 160 A | 160 A |
| Rated short circuit making current | 100 kA | | 20 kA |
| Rated short circuit withstand current | 100 kA | | 20 kA |
| Rated insulation voltage $U_i$ | 1000 V a.c. | | |
| Rated impulse withstand voltage $U_{imp}$ | 8 kV | | |
| Rated power dissipation | 12 W | | |
| Rated frequency | 50-60 Hz | | - |
| Mechanical durability (Number of cycles) | 1600 | | |
| Electrical durability (Number of cycles) | 200 | | |
| IP degree of protection | IP 20 | | |
| Compatible NH Fuse link body size | 00 | | |
| Accessories see page 52 | | | |

EBH00
60 mm busbar system

## EBH00 - Catalogue numbers

| 60 mm busbar system installation | | Cable terminal |
|---|---|---|
| EBH0013TBM8 | Cable terminal – bottom, for connection of conductors with lug terminals | M8 screws |
| EBH0013TTM8 | Cable terminal – top, for connection of conductors with lug terminals | M8 screws |
| EBH0013TBF | Cable terminal – bottom, for connection of conductors with busbar ends | Frame clamps |
| EBH0013TTF | Cable terminal – top, for connection of conductors with busbar ends | Frame clamps |

## EBH00 - Terminal clamps details

| Description | Clamp | Drawing of clamp | Cross-section of conductors | Cu busbar | Tightening torque |
|---|---|---|---|---|---|
| EBH00-M8 | M8 x 16 screw | 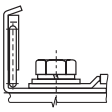 | Conductor with lug terminal up to 70 mm² | Maximum busbar width 20 mm | 10 Nm* |
| EBH00-F | Frame clamps | 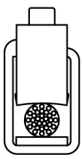 | 4 - 95 mm² | - | 6 Nm*<br>3 Nm* |

For stranded conductors using cable ferrules is recommended
*Using of torque wrench is recommended

# EBH00 Horizontal fuse switch disconnectors, Installation details

Fuse switch disconnectors EBH00 busbar mount type are designed for installation of distribution board's protective panels at two depths: covering system at 32 mm and 70 mm depth

**Covering system at 32 mm depth**

**Covering system at 70 mm depth**

Fuse switch disconnectors EBH00 are manufactured in two versions depending on type of cable terminal:

- EBH00 with bottom cable terminal
- EBH00 with top cable terminal

With cables connected to the top cable terminal EBH00

With cables connected to the bottom cable terminal EBH00

Fuse switch disconnector EBH00 suitable for busbar system has special cavity in its main base

# EBH00 Fuse switch disconnectors - Installation details



Cable terminals:

M8 screw terminal EBH00

Frame clamp EBH00

It is possible to install microswitch indicating position of fuse switch disconnectors EBH00

Slot to insert wires connected to microswitch

# EBH00 - Features and benefits

## New features of cable terminals

- Connection of one or two sector-shaped conductors with cross-section up to 120 mm²
- Connection of two round conductors with busbar ends and cross-section up to 70 mm²

## Space saving

- Possible reduction of external width of cable distribution cabinet to width of a fuse switch disconnector

## Efficient current circuit

- No screw or riveted connection between contact and cable terminal (uniform design of current circuit ensures lower power loss and operating temperature)

## Safety

- Fuse cover and cable terminal cover sealing
- Extension of covering of conductors connected to cable terminals by installation of additional covers



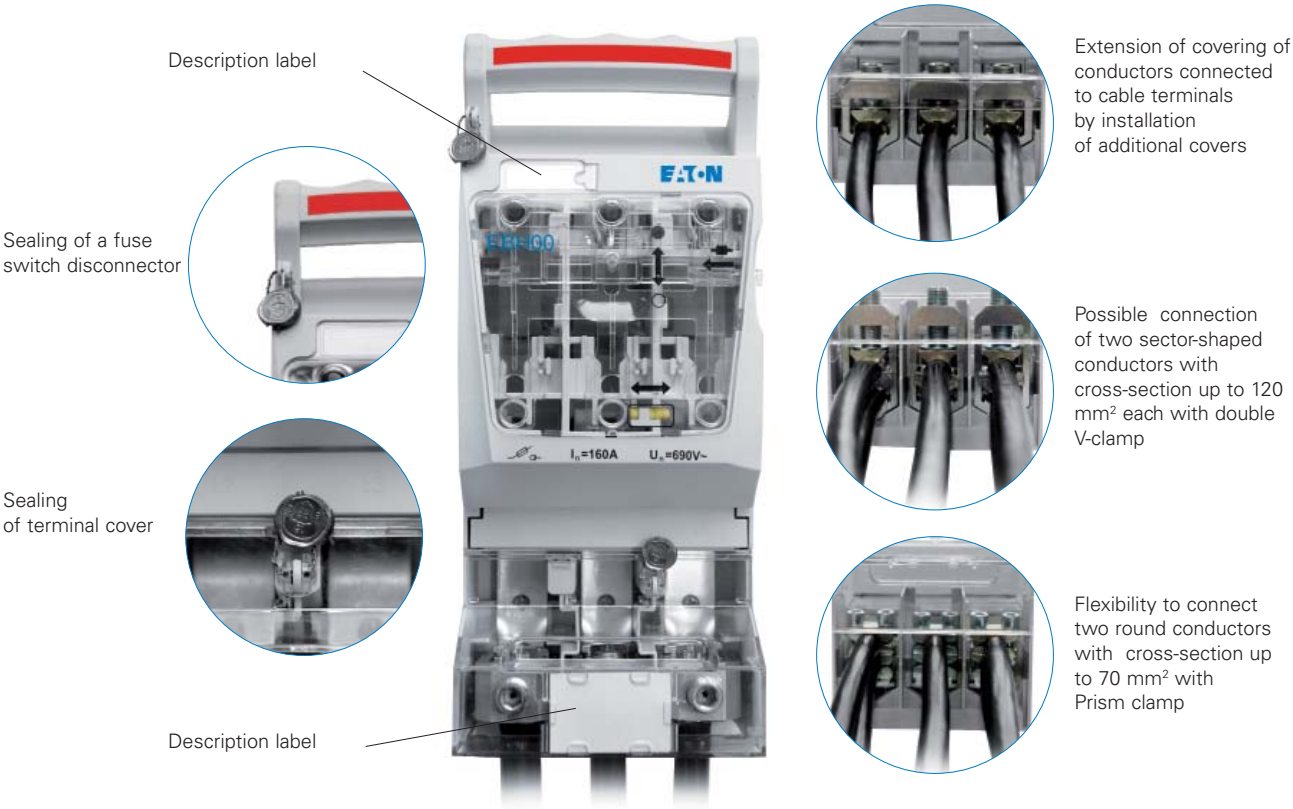

# EBH00 - Extended covering of conductors connected to cable terminal

For extension of covering of conductors connected to cable terminals, for example: to fully cover cables in cable distribution cabinet, any required number of additional covers could be installed. Cover length - 50 mm.

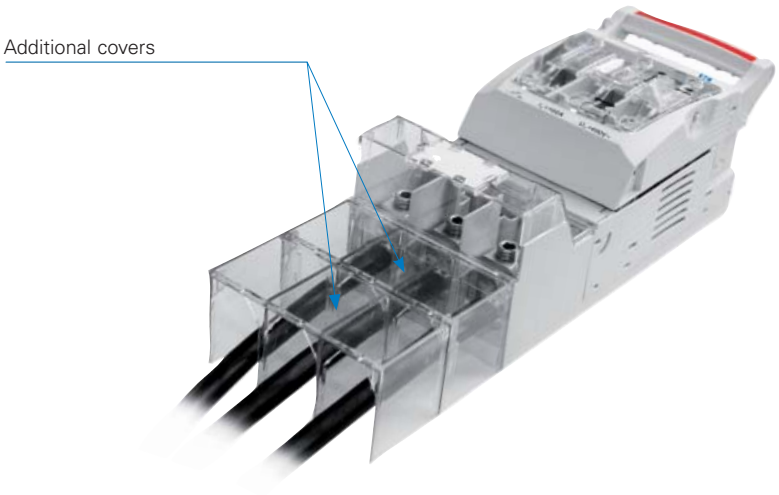


EBH00 with V-clamp for connection of sector-shaped conductors with cross-section up to 120 mm²

# EBH1 Horizontal fuse switch disconnectors, size 1, 250 A, 690 V a.c.

## EBH1 - Technical data

| Description | EBH103 Mounting plate installation | | EBH113 and EBH123 60 mm and 100 mm busbar system | | |
|---|---|---|---|---|---|
| Rated thermal current $I_{th}=I_n$ | 250 A | | 250 A | | |
| Rated voltage $U_n$ | 690 V | | 690 V | | |
| Utilisation category | AC-23B | DC-22B | AC-23B | AC-22B | DC-22B* |
| Rated switching voltage $U_e$ | 690 V a.c. | 250 V a.c. | 400 V a.c. | 690 V a.c. | 250* V a.c. |
| Rated switching current $I_e$ | 250 A | 250 A | 250 A | | |
| Rated short circuit making current | 80 kA (690 V a.c.) 100 kA (400 V a.c.) | 25 kA (400 & 690 V a.c.) | 80 kA (690 V a.c.) 100 kA (400 V a.c.) | | 25* kA (400 & 690 V a.c.) |
| Rated short circuit withstand current | | | | | |
| Rated insulation voltage $U_i$ | 1000 V | | 1000 V | | |
| Rated impulse withstand voltage $U_{imp}$ | 8 kV | | 8 kV | | |
| Rated power dissipation | 32 W | | 32W | | |
| Rated frequency | 50-60 Hz | - | 50-60 Hz | | - |
| Mechanical durability (Number of cycles) | 1600 | | 1600 | | |
| Electrical durability (Number of cycles) | 200 | | 200 | | |
| IP degree of protection (IP) | 30 | | 30 | | |
| Compatible NH Fuse link body size | 1 | | 1 | | |
| Accessories see page 52 | | | | | |

* For 60 mm busbar system

EBH1
for installation
on mounting plate

## EBH1 - Catalogue numbers

| Installation on mounting plate | | Cable terminals |
|---|---|---|
| EBH1O3TS8 | For connection of round conductors | S-bridge clamps |
| EBH1O3TM1 | For connection of conductors with lug terminals | Screws |
| EBH1O3TV1 | For connection of sector-shaped conductors | V-clamps |
| EBH1O3TVS | For connection of round conductors, top terminals - V-terminals, bottom terminals - S-bridge terminals | V- clamps / S-bridge clamps |
| EBH1O3TVM | For connection of round conductors, top terminals - V-terminals, bottom terminals - screw terminals | V- clamps /screws |
| EBH1O3TSV | For connection of round conductors, top terminals - S-bridge terminals, bottom terminals - V-terminals | S-bridge clamps / V- clamps |
| EBH1O3TMV | For connection of round conductors, top terminals - screw terminals, bottom terminals - V-terminals | screw terminals / V- clamps |
| **60 mm busbar system** | | **Cable terminals** |
| EBH113TTS8 | Top cable terminals, for connection of round conductors | S-bridge clamps |
| EBH113TBS8 | Bottom cable terminals, for connection of round conductors | S-bridge clamps |
| EBH113TBM1 | Bottom cable terminals, for connection of conductors with lug terminals | Screws |
| EBH113TTV1 | Top cable terminals, for connection of sector-shaped conductors | V- clamps |
| EBH113TBV1 | Bottom cable terminals, for connection of sector-shaped conductors | V- clamps |
| **100 mm busbar system** | | **Cable terminals** |
| EBH123TTS8 | Top cable terminals, for connection of round conductors | S-bridge clamps |
| EBH123TBS8 | Bottom cable terminals, for connection of round conductors | S-bridge clamps |
| EBH123TTM1 | Top cable terminals, for connection of conductors with lug terminals | Screws |
| EBH123TBM1 | Bottom cable terminals, for connection of conductors with lug terminals | Screws |
| EBH123TTV1 | Top cable terminals, for connection of sector-shaped conductors | V-clamps |
| EBH123TBV1 | Bottom cable terminals, for connection of sector-shaped conductors | V-clamps |

# EBH1 Horizontal fuse switch disconnectors, size 1, 250 A, 690 V a.c.

## EBH1 - Terminal clamps details

| Description | EBH1 | EBH1 M10 screw | EBH 1 V-clamps |
|---|---|---|---|
| Clamp | S-bridge clamp 2xM8x30 | M10x25 screw | V-clamp HS 35-300-C |
| Picture of a clamp | | | |
| Drawing of a clamp | 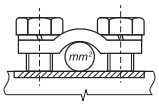  | 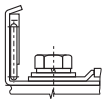 | 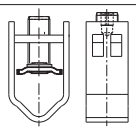 |
| Cross-section of conductors | Cu/Al conductor 35 - 120 mm² | Conductor with lug terminal up to 120 mm² | V-clamp for direct fixing of conductor with busbar end with cross-section of: 35 - 185 mm² 35 - 240 mm² 35 - 240 mm² 35 - 300 mm² |
| Cu busbar | maximum busbar width 35 mm | | |
| Tightening torque | 10 Nm* | 20 Nm* | 40 Nm* |
| Dimensions and spacing of holes for installation of EBH1 on mounting plate | 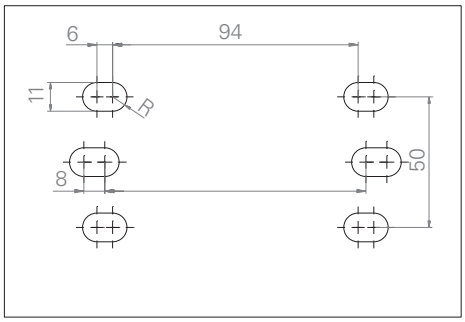  | | |

For stranded conductors using cable ferrules is recommended
*Using of torque wrench is recommended

# EBH1 Horizontal fuse switch disconnectors, size 1 installation details

EBH1
for installation on mounting plate

EBH1
for installation on busbar system

EBH1
for installation on mounting plate,
with double terminal shrouds

EBH1
for installation on mounting plate, picture of fuse switch disconnector without fuse links cover and terminal shrouds, top cable terminal - M screws, bottom cable terminal - V-clamps, (EBH1 bottom cable terminal - M screws, top cable terminal - V-clamps)

# EBH2 Horizontal fuse switch disconnector, size 2, 400 A, 690 V a.c.

## EBH2 - Technical data

| Description | | EBH2 | | |
|---|---|---|---|---|
| Rated thermal current $I_{th}$ | | 400 A | | |
| Rated voltage $U_n$ | | 690 V a.c. | | |
| Utilisation category | | AC-23B | DC-21B | DC-22B |
| Rated switching voltage $U_e$ | | 690 V a.c. | 440 V a.c. | 220 V a.c. |
| Rated switching current $I_e$ | | 400 A | 400 A | 400 A |
| Rated short circuit making current | 690 V a.c. | 80 kA | 15 kA | 20 kA |
| | 400 V a.c. | 100 kA | | |
| Rated short circuit withstand current | 690 V a.c. | 80 kA | 15 kA | 20 kA |
| | 400 V a.c. | 100 kA | | |
| Rated insulation voltage $U_i$ | | 1000 V a.c. | | |
| Rated impulse withstand voltage $U_{imp}$ | | 12 kV | | |
| Rated power dissipation | | 45 W | | |
| Rated frequency | | 50-60 Hz | - | |
| Mechanical durability (Number of cycles) | | 100 | | |
| Electrical durability (Number of cycles) | | 200 | | |
| IP degree of protection | | IP20 | | |
| Compatible NH Fuse link body size | | 2 | | |
| Accessories see page 52 | | | | |

EBH2
for installation on mounting plate

## EBH2 - Catalogue numbers

| Installation on mounting plate | | Cable terminals |
|---|---|---|
| EBH2O3TS8 | For connection of round condutors | S-bridge clamps |
| EBH2O3TM1 | For connection of sector-shaped condutors | V-clamps |
| EBH2O3TV1 | For connection of sector-shaped conductors | Double V- clamps |
| EBH2O3TW1 | For connection of conductors with lug terminals | M10 screws |
| **60 mm busbar system** | | **Cable terminals** |
| EBH213TBM1 | Bottom cable terminals, for connection of conductors with lug terminals | M10 screws |
| EBH213TTM1 | Top cable terminals, for connection of conductors with lug terminals | M10 screws |
| EBH213TBV1 | Bottom cable terminals, for connection of sector-shaped conductors | V-clamps |
| EBH213TTV1 | Top cable terminals, for connection of sector-shaped conductors | V-clamps |
| EBH213TBW1 | Bottom cable terminals, for connection of sector-shaped conductors | Double V- clamps |
| EBH213TTW1 | Top cable terminals, for connection of sector-shaped conductors | Double V- clamps |
| **100 mm busbar system** | | **Cable terminals** |
| EBH223TBM1 | Bottom cable terminals, for connection of conductors with lug terminals | M10 screws |
| EBH223TTM1 | Top cable terminals, for connection of conductors with lug terminals | M10 screws |
| EBH223TBV1 | Bottom cable terminals, for connection of sector-shaped conductors | V-clamps |
| EBH223TTV1 | Top cable terminals, for connection of sector-shaped conductors | V-clamps |
| EBH223TBW1 | Bottom cable terminals, for connection of sector-shaped conductors | Double V-clamps |
| EBH223TTW1 | Top cable terminals, for connection of sector-shaped conductors | Double V-clamps |

# EBH2 Horizontal fuse switch disconnector, size 2, 400 A, 690 V a.c.

## EBH2 - Terminal clamps details

| Description | Clamp | Drawing of clamps | Cross-section of conductors | Cu busbar | Tightening torque | Dimensions and spacing of holes for installation of EBH 2 on mounting plate |
|---|---|---|---|---|---|---|
| EBH 2 | S-bridge clamp 2 x M8 x 30 | 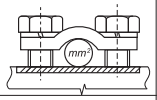 | Cu/Al conductor 50÷185 mm² | Maximum busbar width 35 mm | 10 Nm* | 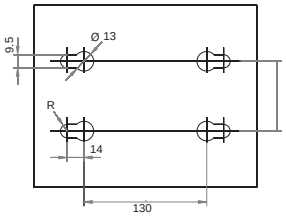 |
| | M10 x 30 screw | 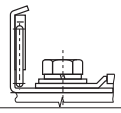 | conductor with lug terminal up to 240 mm² | | 20 Nm* | |
| | V- clamp 35-300SW-B | 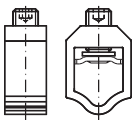 | V-clamp for direct fixing of conductor with busbar end with cross-section: 35 - 185 mm² 35 - 240 mm² 35 - 240 mm² 35- 300 mm² | | 30 Nm* | |
| | Double V- clamp HS2/ 35-240-C | 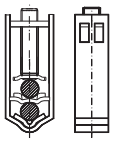 | V-clamp for direct fixing of conductor with busbar end with cross-section: 35 - 185 mm² 35 - 240 mm² 35 - 240 mm² 35 - 300 mm² | | 40 Nm* | |

For stranded conductors using cable ferrules is recommended
*using of torque wrench is recommended

EBH2
for installation on mounting plate,
cable terminals: V-clamps

EBH2
for installation on mounting plate,
cable terminals: double V-clamps

EBH2*
(top cable terminal: M10 screws)
EBH2 -SD* (bottom cable terminal:
M10 screws) for installation on busbar
systems

EBH2 (top cable terminal: double V-clamp
EBH2 (bottom cable terminal: doubleV-clamp) for
installation on busbar systems

EBH2 (top cable terminal: V-clamp)
EBH2 (bottom cable terminal: V-clamp) for installation on
busbar systems

# EBH3 Horizontal fuse switch disconnector, size 3, 630 A, 690 V a.c.

## EBH3 - Technical data

| Description | EBH 3 | |
|---|---|---|
| Rated thermal current $I_{th}=I_n$ | 630 A | |
| Rated voltage $U_n$ | 690 V a.c. | |
| Utilisation category | AC-22B | DC-21B |
| Rated switching voltage $U_e$ | 690 V a.c. | 250 V a.c. |
| Rated switching current $I_e$ | 630 A | 630 A |
| Rated short circuit making current | 25 kA | |
| Rated short circuit withstand current | 100 kA | |
| Rated insulation voltage $U_i$ | 1000 V a.c. | |
| Rated impulse withstand voltage $U_{imp}$ | 12 kV | |
| Rated power dissipation | 60 W | |
| Rated frequency | 50-60 Hz | |
| Mechanical durability (Number of cycles) | 1000 | |
| Electrical durability (Number of cycles) | 200 | |
| IP degree of protection | IP 20 | |
| Compatible NH Fuse link body size | 3 | |
| Accessories see page 52 | | |

EBH3
for installation on mounting plate

## EBH3 - Catalogue numbers

| Installation on mounting plate | | Cable terminal |
|---|---|---|
| EBH3O3TS8 | For connection of round conductors | S-bridge clamps |
| EBH3O3TM2 | For connection of conductors with lug terminals | M12 screws |
| **60 mm busbar system** | | **Cable terminal** |
| EBH313TM2 | For installation on 60 mm busbar system, top/bottom cable terminal | M12 screws |

## EBH3 - Terminal clamps details

| Version | Clamp | Drawing of clamp | Cross-section of conductors | Cu busbar | Tightening torque | Dimensions and spacing of holes for installation of EBH 3 on mounting plate |
|---|---|---|---|---|---|---|
| EBH 3 | S-bridge clamp 2 x M8 x 35 | 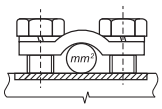 | Cu/Al conductor 50 - 185 mm² | Maximum busbar width 35 mm | 10 Nm* | 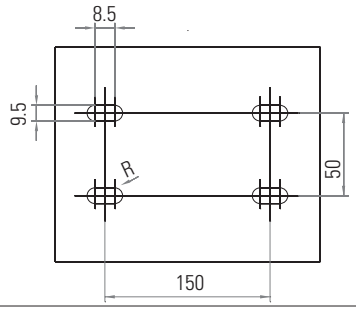 |
| | M12 x 30 screw | 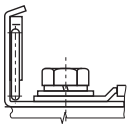 | conductor with lug terminal up to 240 mm² | | 20 Nm* | |

For stranded conductors using cable ferrules is recommended
*using of torque wrench is recommended

# Horizontal fuse switch disconnector electronic fuse monitoring module*

L1, L2, L3 diodes are on - all three phases are supplied, all fuse links are operational.

→ Relay contacts: [21..22] - closed; [13..14] - opened

L1, L2, L3 diodes are flashing - all three phases are supplied, fuse links operated

→ Relay contacts: [21..22] - opened; [13..14] - closed

L1, L2, L3 diodes are off - two or more phases are not supplied or fuse links are removed.
→ Relay contacts: [21..22] - opened; [13..14] - closed

Parameters

Operating voltage AC - 400 - 690 V, 40 - 60 Hz;

Relay parameters 5 A , 250 V~

CAUTION! Use only with fuse links with non-isolated gripping lugs!

EBH00-X
with electronic fuse monitoring module

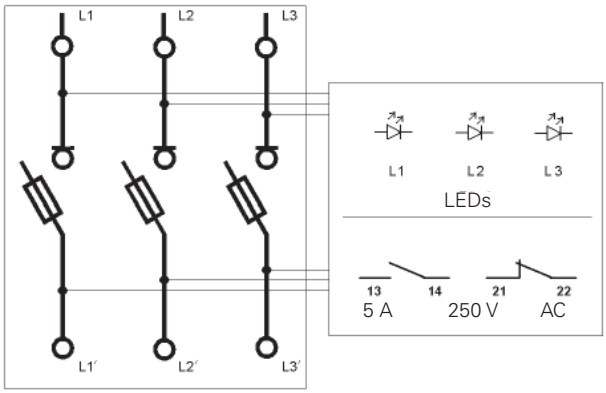


Fuse switch disconnector

Electronic fuse monitoring module

**disconnector contact position during normal operation**

## Electronic fuse monitoring module, cable terminal - S-bridge clamps installation details

| Catalogue number | Description |
|---|---|
| EBH00O3TS5-TE | For installation on mounting plate, power supply connected to top cable terminals |
| EBH00O3TS5-BE | For installation on mounting plate, power supply connected to top bottom terminals |
| EBH0013TTS5-E | For installation on 60 mm busbar system, top cable terminals |
| EBH0013TBS5-E | For installation on 60 mm busbar system, bottom cable terminals |
| EBH1O3TS8-TE | For installation on mounting plate, power supply connected to top cable terminals |
| EBH1O3TS8-BE | For installation on mounting plate, power supply connected to top bottom terminals |
| EBH113TTS8-E | For installation on 60 mm busbar system, top cable terminals |
| EBH113TBS8-E | For installation on 60 mm busbar system, bottom cable terminals |
| EBH123TTS8-E | For installation on 100 mm busbar system, top cable terminals |
| EBH123TBS8-E | For installation on 100 mm busbar system, bottom cable terminals |
| EBH2O3TS8-TE | For installation on mounting plate, power supply connected to top cable terminals |
| EBH2O3TS8-BE | For installation on mounting plate, power supply connected to top bottom terminals |
| EBH213TTS8-E | For installation on 60 mm busbar system, top cable terminals |
| EBH213TBS8-E | For installation on 60 mm busbar system, bottom cable terminals |
| EBH223TTS8-E | For installation on 100 mm busbar system, top cable terminals |
| EBH223TBS8-E | For installation on 100 mm busbar system, bottom cable terminals |

* Available upon request. Please contact Eaton's application engineering department for further details: buletechnical@eaton.com

# EBH Horizontal Fuse switch disconnector - Outline drawings (mm)



**EBH000 Mounting plate installation, S-Bridge clamps and M Screws**

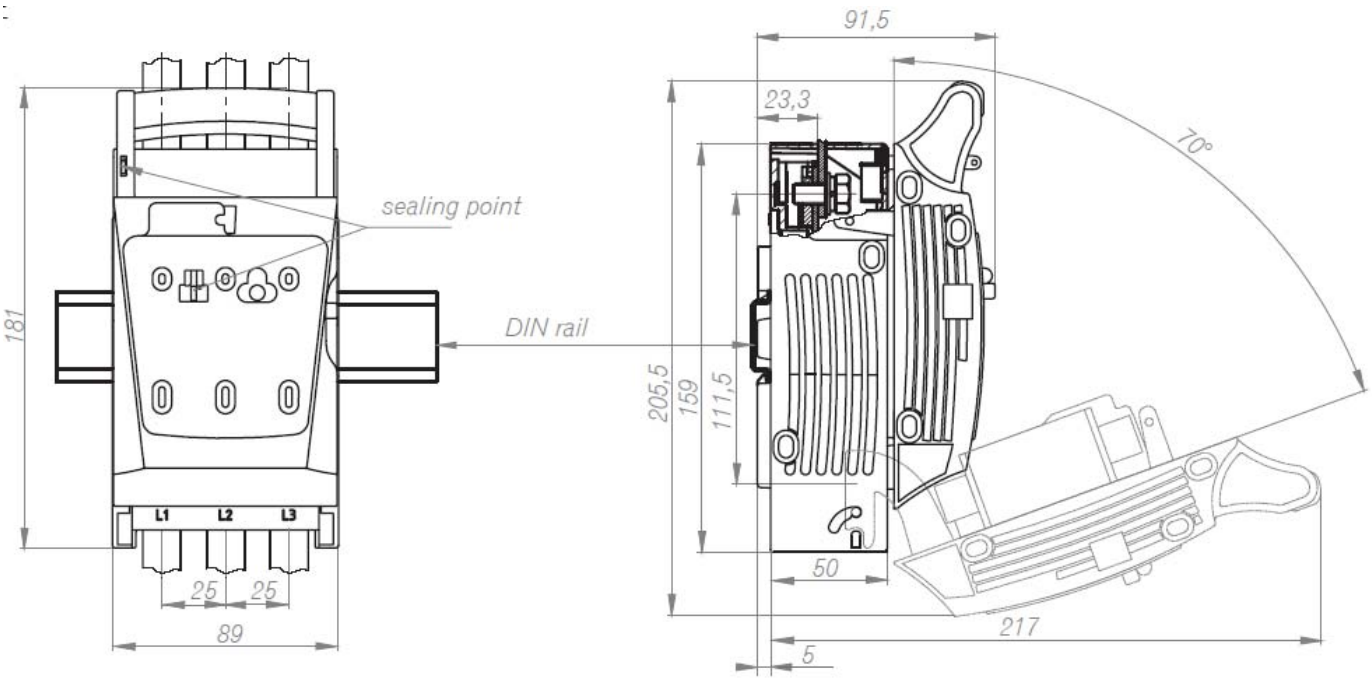


**EBH000 Mounting plate installation, S-Bridge clamps and M Screws with lengthened terminal shrouds**

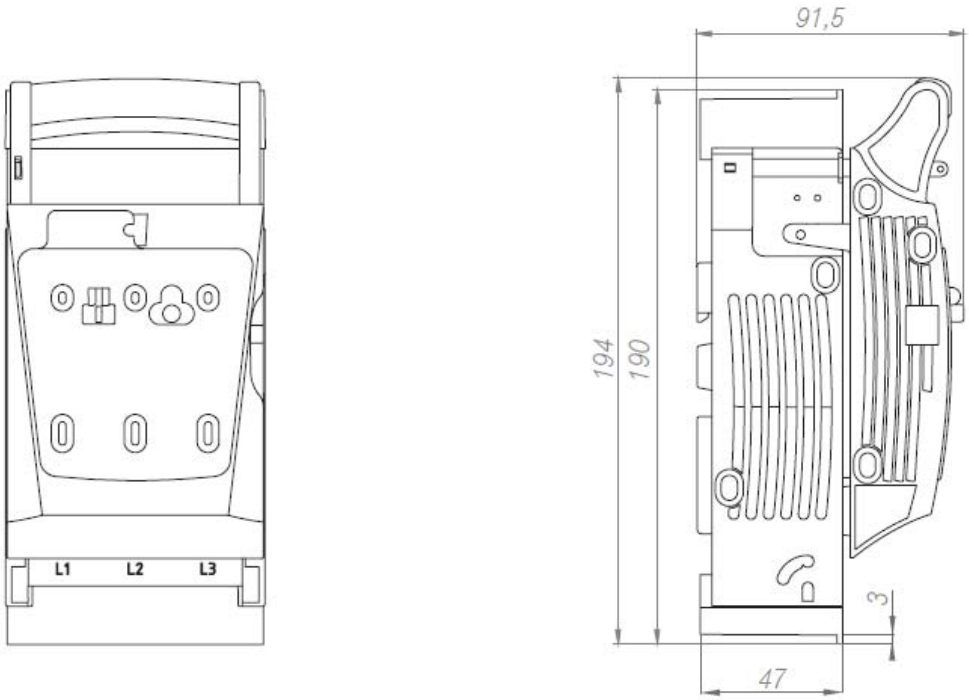

# EBH Horizontal fuse switch disconnector - Outline drawings (mm)

### EBH000 - 60 mm busbar system busbar installation

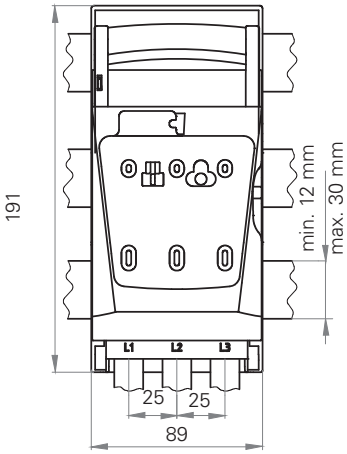


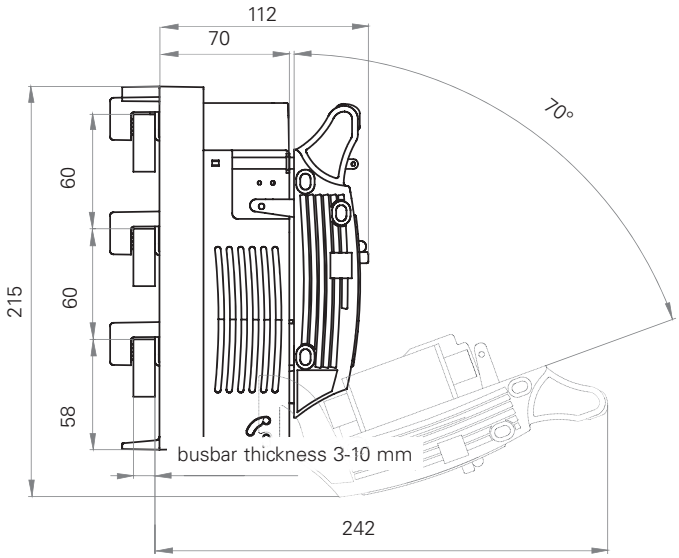


### EBH00 Mounting plate installation

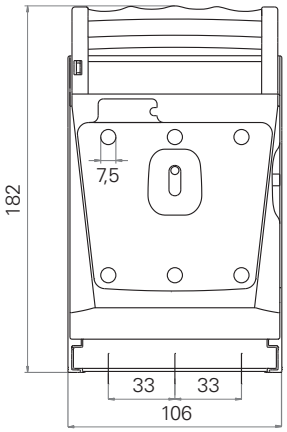


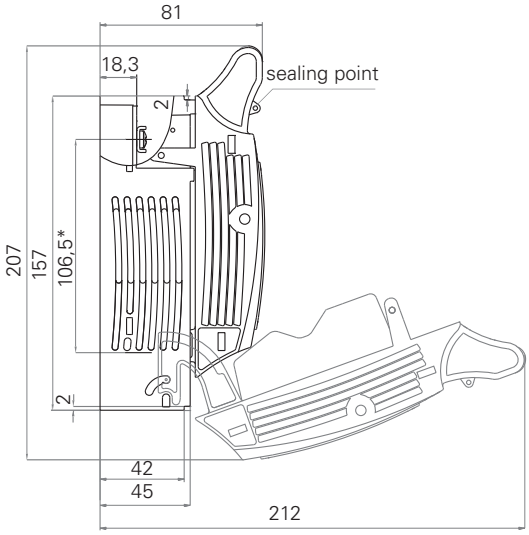


*122.5 mm for M screw terminal (for busbar and lug terminal)

# EBH Horizontal fuse switch disconnector - Outline drawings (mm)



### EBH00 Mounting plate installation with lengthened terminal shroud

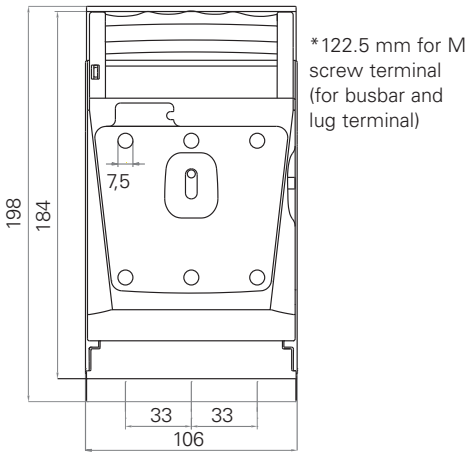


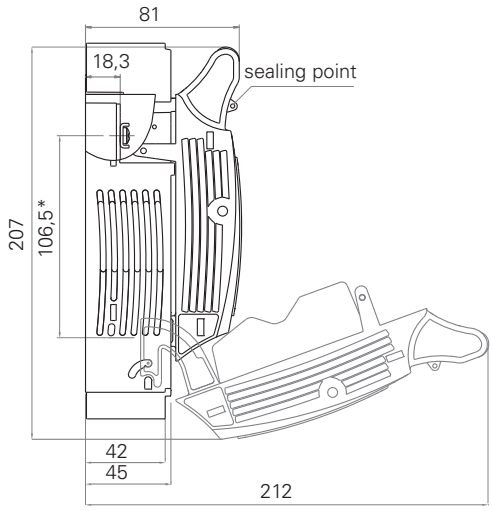


### EBH003T Installation on 60 mm busbar

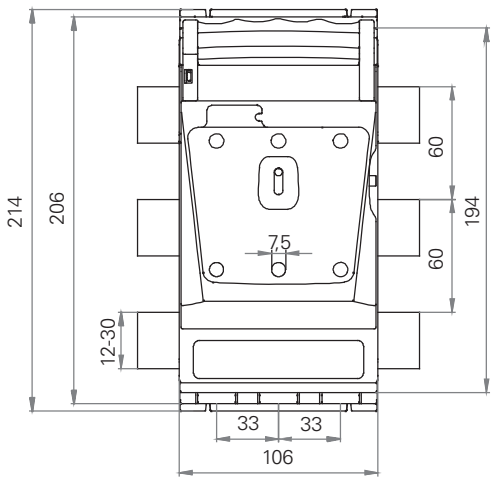


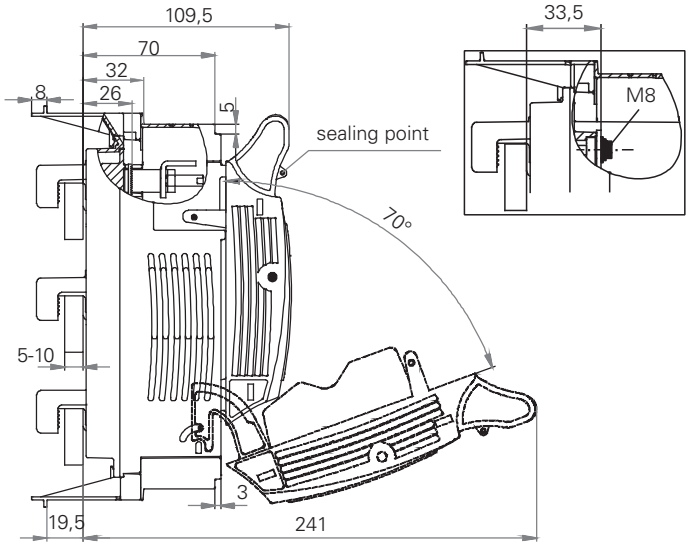

# EBH Horizontal fuse switch disconnector - Outline drawings (mm)

### EBH1 Mounting plate installation S Bridge and M8 Screws

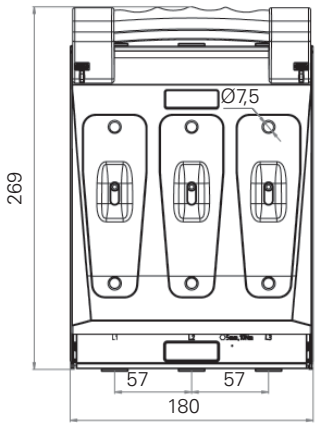


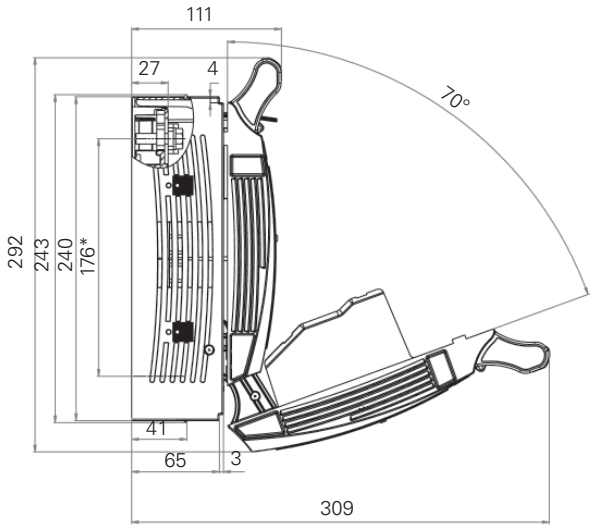


*197 mm for M type clamp

### EBH1 Mounting plate installation V-clamps

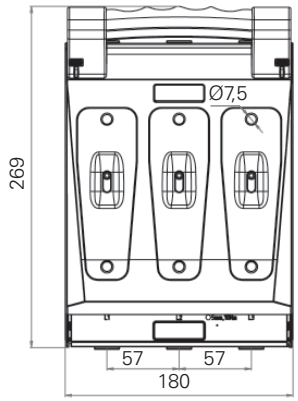


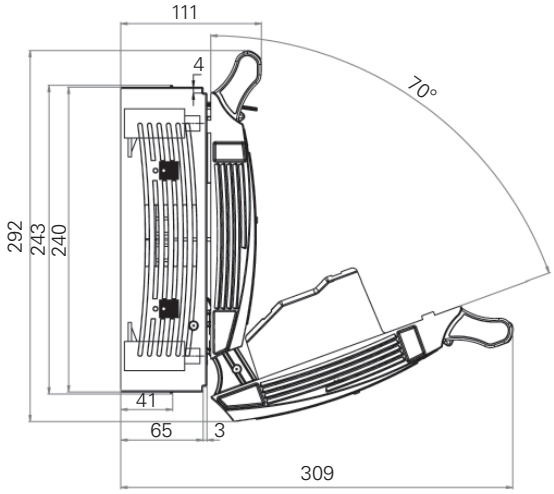

# EBH Horizontal fuse switch disconnector - Outline drawings (mm)



### EBH1 60 mm and 100 mm busbar installation

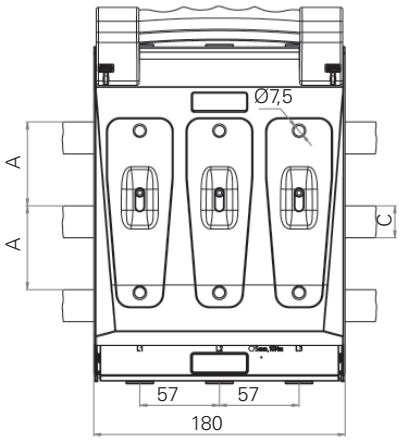


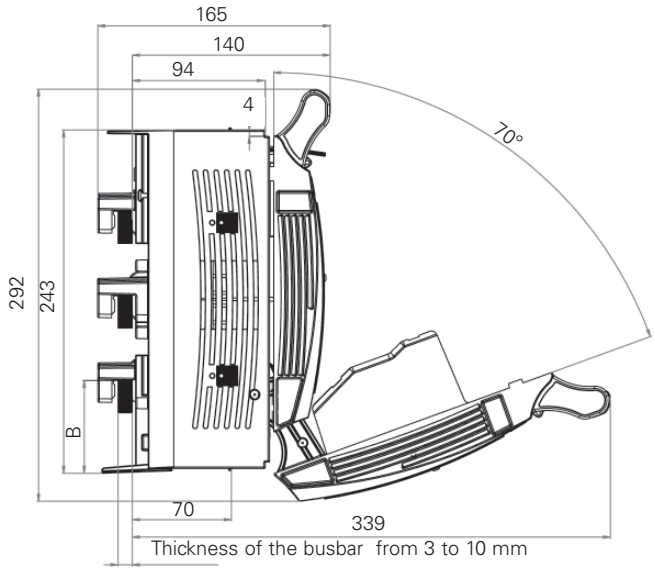


| A | B | C |
|---|---|---|
| 60 mm | 66 mm | max. 30 mm |
| 100 mm | 27 - 66 mm | max. 60 mm |

M,S,V types of clamps

### EBH2 Mounting plate installation S-Bridge clamps and M Screws

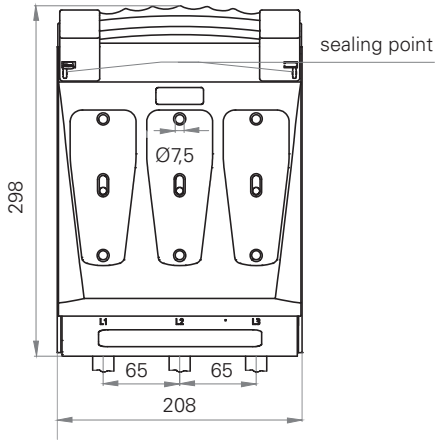


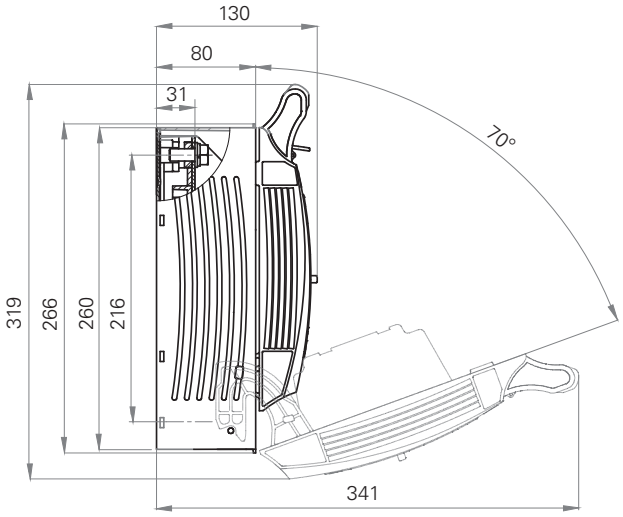

# EBH Horizontal fuse switch disconnector - Outline drawings (mm)

### EBH2 Mounting plate installation , V-clamps

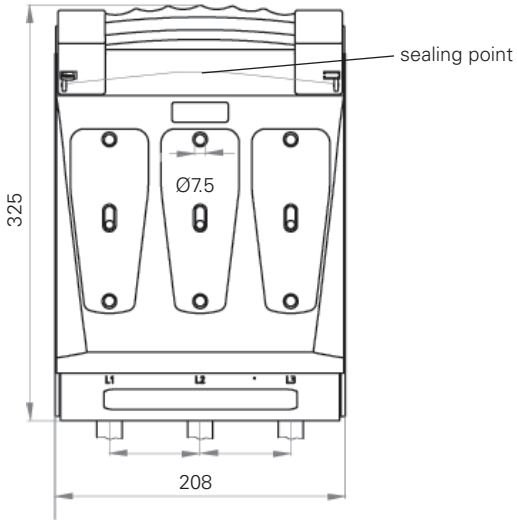


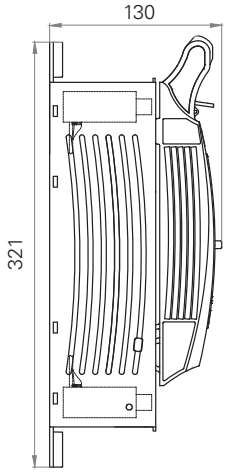


### EBH2 Mounting plate installation, double V-clamps

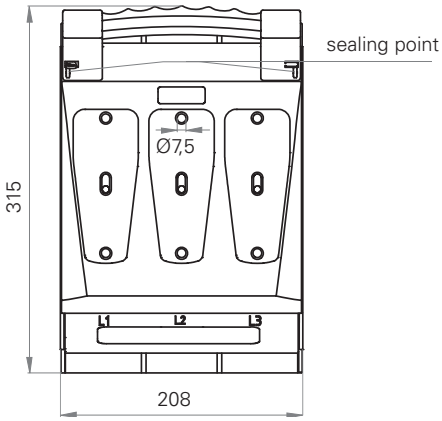


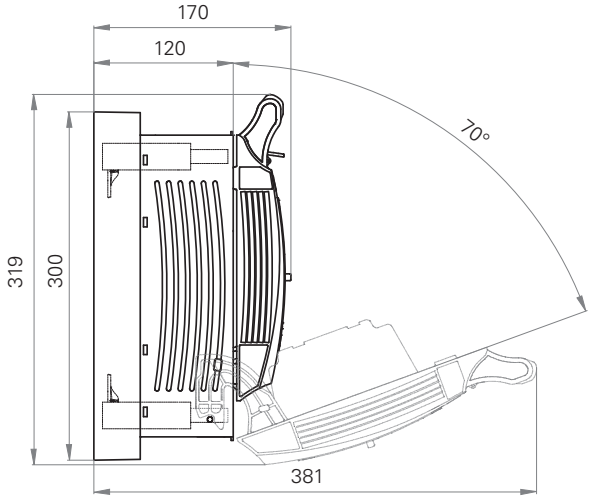

# EBH Horizontal fuse switch disconnector - Outline drawings (mm)

### EBH2 Installation on 60 mm and 100 mm busbar, M Screws

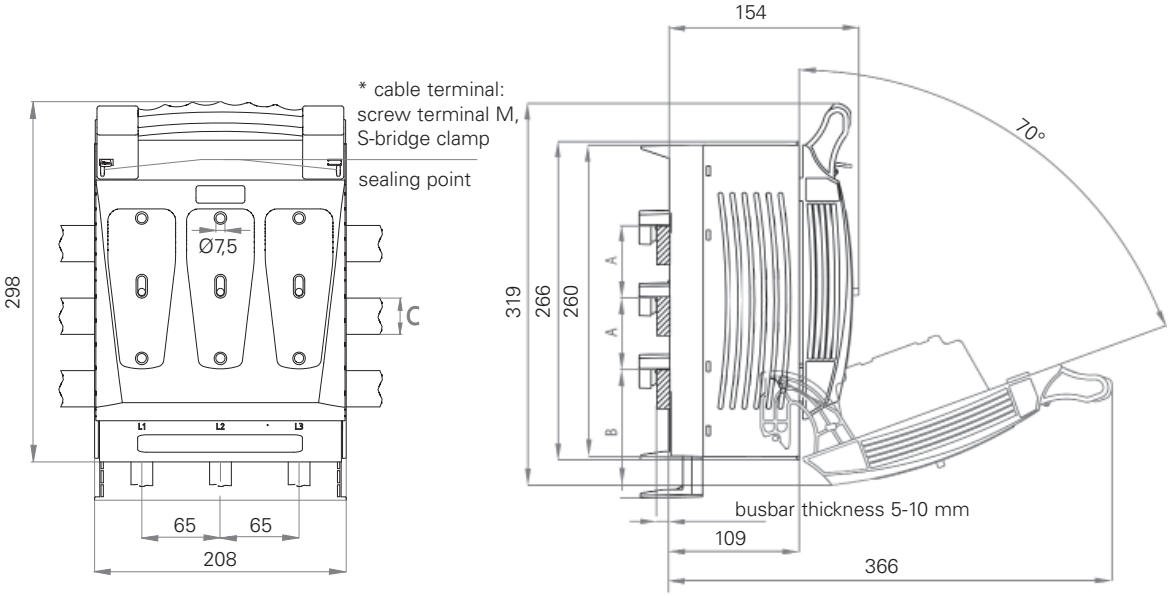


### EBH2 Installation on 60 mm and 100 mm busbar, V-clamps

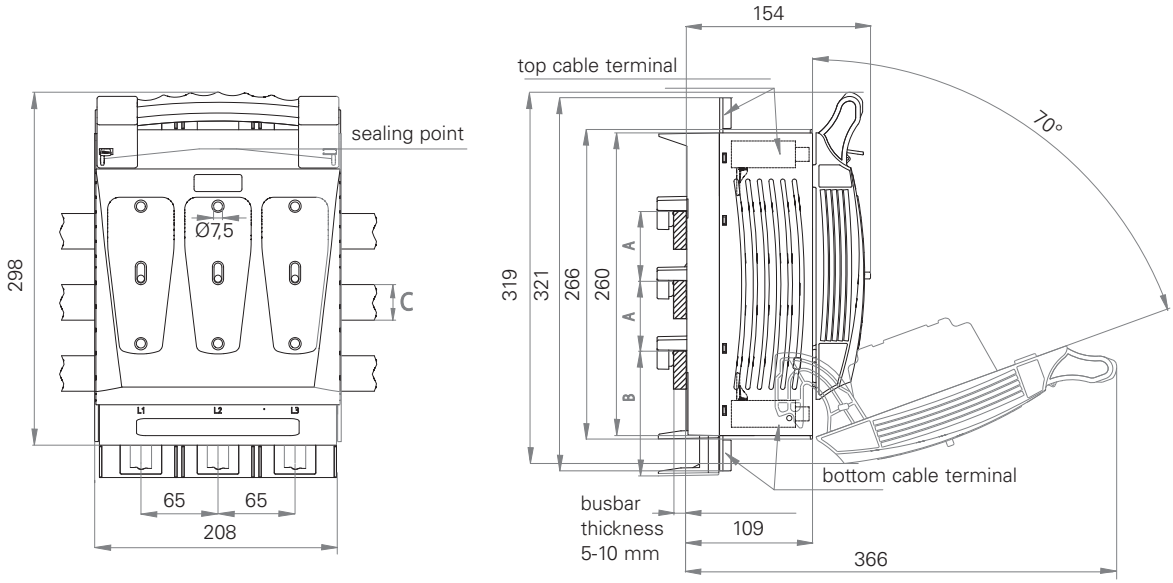


| A | B | C |
|---|---|---|
| 60 mm | 75 mm | max. 30 mm |
| 100 mm | 35 - 67 mm | max. 60 mm |

# EBH Horizontal fuse switch disconnector - Outline drawings (mm)

### EBH2 Installation on 60 mm and 100 mm busbar, double V-clamps

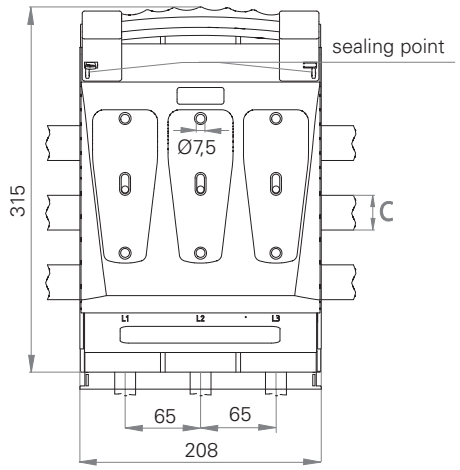


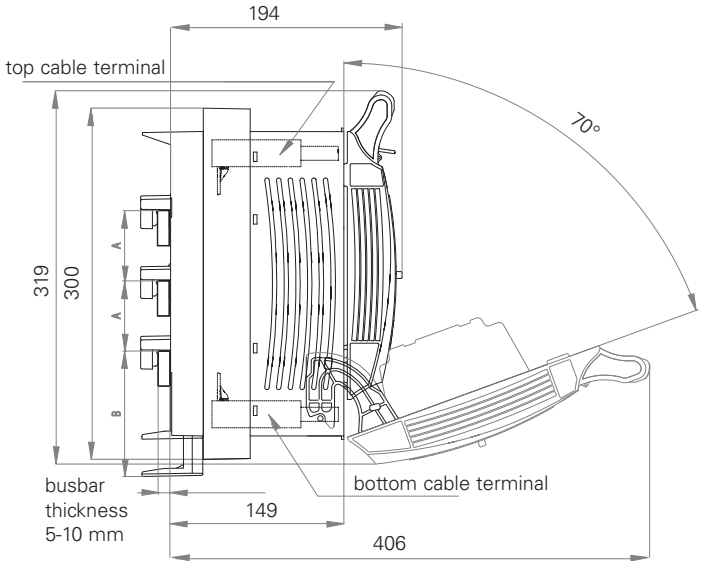


| A | B | C |
|---|---|---|
| 60 mm | 75 mm | max. 30 mm |
| 100 mm | 35 - 67 mm | max. 60 mm |

### EBH3 Mounting plate installation, S bridge and M Screws

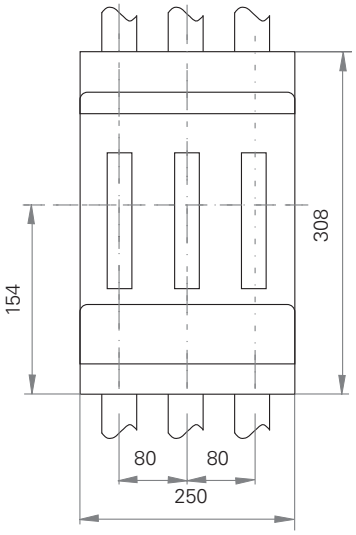


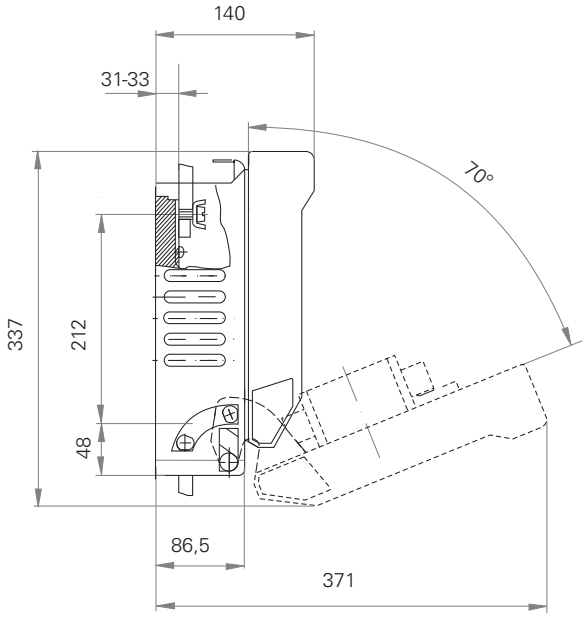

# EBH Horizontal fuse switch disconnector - Outline drawings (mm)



**EBH3 60 mm busbar installation, M Screws**

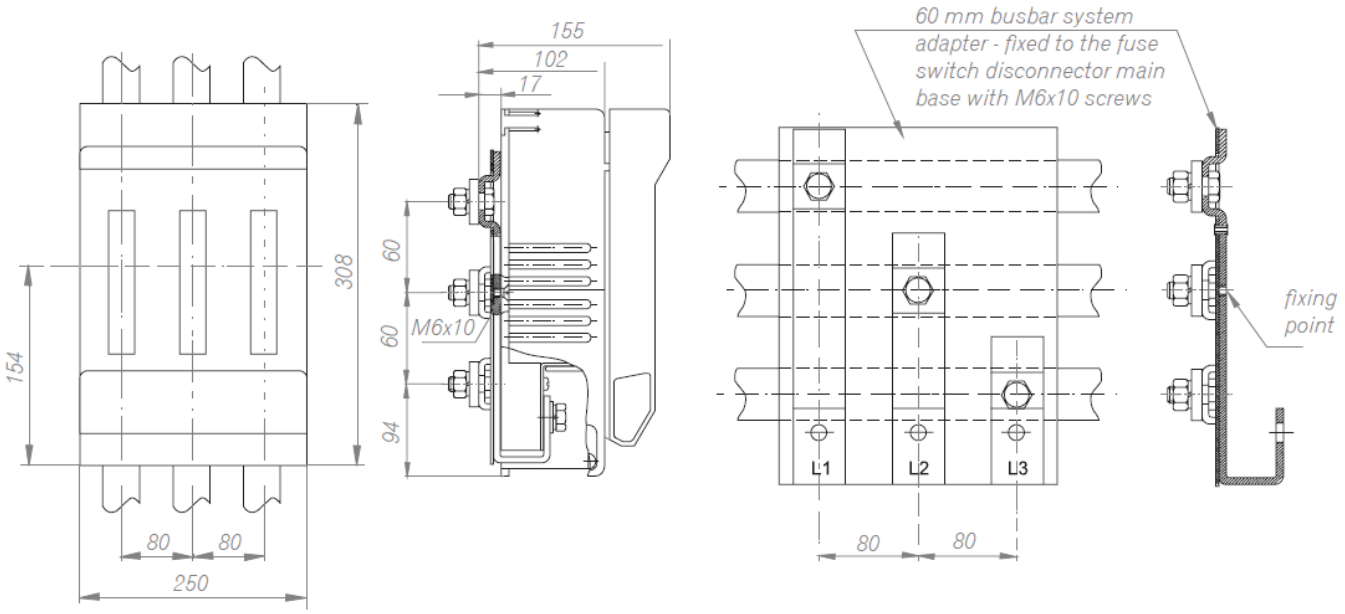


**EBH with electronic modules width - mm**

**EBH 00**

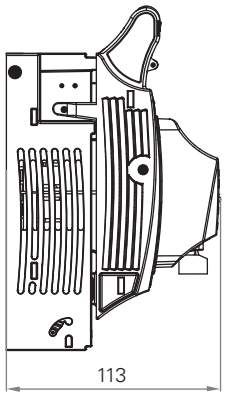


**EBH 1**

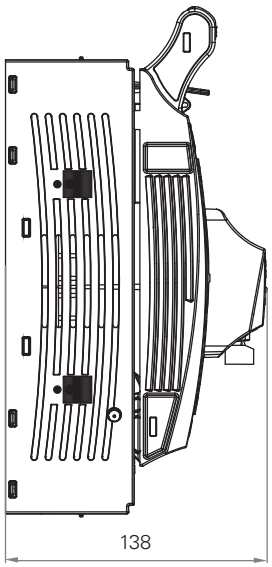


**EBH 2**

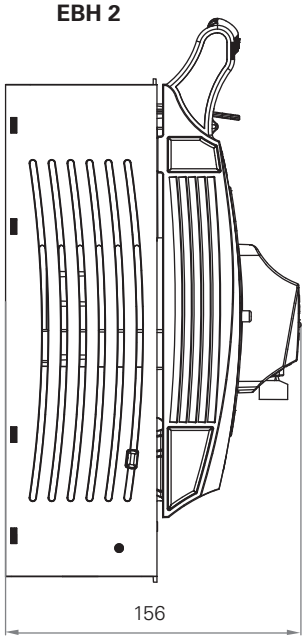

# EBH Horizontal fuse switch disconnector - Outline drawings (mm)

**Terminal adaptors**

**EBH 00**

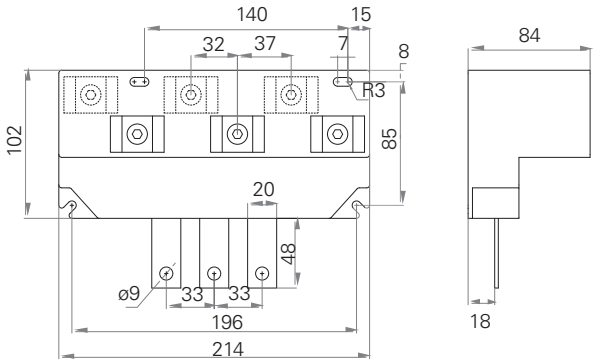


**EBH1**

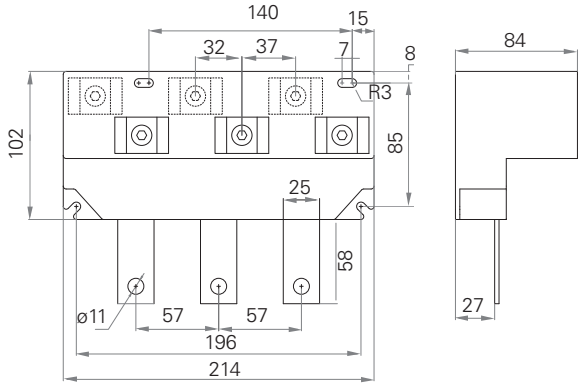


**EBH2**

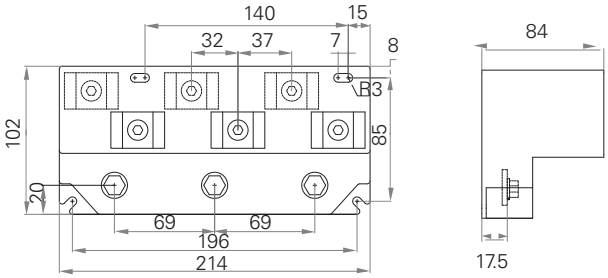


EBH

# EBH Horizontal fuse switch disconnector - Accessories

## EBH000

### EBHA1 - Feeding bridge

Feeding bridge EBH 000 25-95 mm² (1 set - 3 pcs.) for connection of conductor of cross-section

25 - 70 mm² ⊗ 25 - 95 mm² ●

### EBHA2 - Auxiliary contacts

Auxiliary contacts (microswitch)
AC-15 $U_e$ 230 V~ $I_e$ 2,5 A
DC-13 $U_e$ 230 V~ $I_e$ 0,3 A

### EBHA3 - Additional terminal shroud

Additional terminal shroud „0"extends shroud length of 25 mm

## EBH00

### EBHA4 - Feeding bridge

Feeding bridge clamp EBH 00 25 - 95 mm² (1 set - 3 pcs.) for connection of conductor of cross-section

25 - 70 mm² ⊗ 25 - 95 mm² ●

### EBHA5 - Clamp

Clamp for EBH 00
2 x 25 mm² 1 x 16 mm²

### EBHA6 - Clamp

Clamp for EBH 00 4 x 10 mm²

### EBHA7 - Auxiliary contacts (microswitch)

Auxiliary contacts (microswitch)
AC-15 $U_e$ 230 V~ $I_e$ 2.5 A
DC-13 $U_e$ 230 V~ $I_e$ 0.3 A

### EBHA8 - Full cover (matt)

Full cover matt

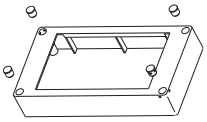

### EBHA9 - Terminal adaptor

Terminal adaptor + 3 x clamp + terminal shroud

## EBH 1

### EBHA10 - Terminal adaptor

Terminal adaptor EBH1
3 x V-clamp + terminal shroud

## EBH 1 and EBH2

### EBHA11 - Auxiliary contacts microswitch

Auxiliary contacts microswitch
AC-15 $U_e$ 230 V ~ $I_e$ = 2.5 A
DC-13 $U_e$ 230 V ~ $I_e$ = 0.3 A

## EBH2

### EBHA12 - Terminal adaptor

Terminal adaptor EBH2
3 x V-Clamp + terminal shroud

## EBH3

### EBHA13 - Auxiliary contacts

Auxiliary contacts
(microswitch)
AC-15 $U_e$ 110/230/400 V~ $I_e$ = 1 A
DC-13 $U_e$ 48/110/220 V~ $I_e$ = 0.5 A
screw terminals
conductors cross-section:
– solid – 1 x 0.5 = 1 mm²
– stranded – 1 x 0.5 = 0.75 mm²

# EBV

## Vertical fuse switch disconnector

- Fibre glass strenghtened, self extinguishing thermoplastics of V0 flammability class
- Double clearance between open contacts
- Arc chutes with deionisation plates over every contact
- Reversible - top/bottom cable terminal connection
- Wide range of accessories


| | |
|---|---|
| EBV Introduction | 54-55 |
| EBV Technical data | 55 |
| EBV Catalogue numbers structure | 56 |
| EBV00 100 mm busbar system | 57-58 |
| EBV00 185 mm busbar system | 59-60 |
| EBV2 185 mm busbar system | 61-62 |
| EBV3 185 mm busbar system | 61 and 63 |
| EBV2 and EBV 3 Fuse disconnector with lateral busbar terminal | 64 |
| EBV with electronic fuse monitoring module | 65-66 |
| Outline drawings | 67-71 |
| Accessories | 72-73 |

## Applications

EBV vertical fuse switch disconnectors are designed for distribution of electricity and protection against short circuits and overloads in three phase. They are designed to be used with NH fuse links and are meant for direct installation on horizontal or vertical busbar systems.

EBV fuse switch disconnectors conform to IEC 60947-1- and IEC 60947-3 standards. EBV fuse switch disconnectors are designed for applications which require reliability and safety like low voltage distribution boards installed in transformer substations, industrial low voltage distribution boards and cable cabinets.

Removal of fuse links is simple and safe. Once the fuse links are removed,there is a large isolating distance clearly visible. Mounting and cable termination is simple and can be accomplished by one person only using insulated equipment.

EBV fuse switch disconnectors are designed to perform the following functions:

- Protection,
- Energy distribution,
- Earthing,
- Switching,
- Touch protection.

## Sizes



EBV fuse switch disconnectors are designed for installation onto 185 mm busbar system. They are available in following sizes (according to rated current):

- 00 (160 A)
- 2 (400 A)
- 3 (630 A and 1250 A upon request)

EBV size 00 are manufactured in two versions depending on busbar system:

- **EBV00/100mm** fuse switch disconnector (160 A) for installation on 100 mm busbar system. Installation on 185 mm busbar system is possible by using an adaptor.
- **EBV00** fuse switch disconnector (160 A) for installation on 185 mm busbar system.

## Construction

EBV fuse switch disconnectors are manufactured in two versions:

- One-pole switching (separately each pole)
- Three-pole switching (three poles simultaneously)

They are manually operated, consequently making and breaking is dependant on the speed of operation.

Main base of fuse switch disconnector EBV is made of halogen free, fibre glass strengthened, self extinguishing, thermoset polyester of V0 flammability class. Other plastic parts of fuse switch disconnectors EBV are made of halogen free fibre glass strengthened, thermoplastic polyamides.

Silver plated contacts provide low power loss. Depending on clamp type, EBV fuse switch disconnectors enable user to connect circular or sector-shaped conductors with busbar ends or conductors with lug terminals. Arc chute with deionization plates are installed over each contact ensuring better arc extinction and exhaust of arc plasma. Protection degree of IP30 from the front is provided.

Additional accessories enable to install EBV fuse switch disconnectors of different sizes on common busbar systems. All sizes of EBV fuse switch disconnectors are provided complete with clamps (i.e. screws, V-terminals, 2V-terminals) and shrouds for cable terminals.

The making and breaking operations has to be done with adequate force since these are manually operated switches

Parallel moving, double contact system.

Fuse switch disconnectors width: 50, 100 and 200 mm.

Suitable for top cable terminal connection.

Flexibility to terminate circular or sector-shaped busbar conductors for V or 2V terminals. Conductors with lugs can be terminated with screw terminals.

Voltage test can be performed through test holes leading to blade contacts.

## Operating conditions

- To be installed in a room free of any dust, aggressive or explosive gases
- Altitude up to 2000 meters above sea level
- Outdoor – in cabinets with protection degree > IP 34
- Ambient temperature from -25°C to +55°C
- Relative humidity of the air should not be higher than 50 percent at temperature of +40°C

## Technical data

| Description | Rated voltage | EBV00 100 mm | EBV00 | EBV2 | EBV3 | EBV3-1250 |
|---|---|---|---|---|---|---|
| Rated thermal current $I_{th}=I_n$ with fuse links | - | 160 A | 160 A | 400 A | 630 A | - |
| Rated thermal current $I_{th}$ with solid links | | - | - | 600 A | 750 A | 1250 A |
| Rated voltage Un | | 690 V a.c. | 690 V a.c. | 690 V a.c. | 690 V a.c. | 400 V a.c. |
| Utilisation category | 690 V a.c. | AC-22B | AC-22B | AC-22B | AC-21B | - |
| | 500 V a.c. | - | - | - | AC-22B | - |
| | 400 V a.c. | AC-23B | AC-23B | AC-23B | AC-23B | AC-22B |
| Rated switching current $I_e$ | - | 160 A | 160 A | 400 A | 630 A[4] | 1250 A |
| Rated short-circuit making current | 690 V a.c. | 25 kA | 80 kA | 100 kA | 80 kA | - |
| | 500 V a.c. | 25 kA | - | 100 kA | 100 kA | - |
| | 400 V a.c. | 25 kA | 100 kA | 100 kA | 100 kA | - |
| Rated short-circuit withstand current | 690 V a.c. | 100 kA | 80 kA | 100 kA | 80 kA | - |
| | 500 V a.c. | 100 kA | - | 100 kA | 100 kA | - |
| | 400 V a.c. | 100 kA | 100 kA | 100 kA | 100 kA | - |
| Rated insulation voltage $U_i$ | - | 1000 | 1000 | 1000 | 1000 | 1000 |
| Rated impulse withstand voltage $U_{imp}$. | | 8 kV | 12 kV | 12 kV | 12 kV | 12 kV |
| Rated short time withstand current $I_{cw}$ | | - | - | 12[1]/15[2] kA | 14[1])/16[2] kA | 15/20[3] kA |
| Rated frequency | | 50-60 Hz | 50-60 Hz | 50-60 Hz | 50-60 Hz | 50-60 Hz |
| Mechanical durability (Number of cycles) | | 1600 | 1600 | 1000 | 1000 | 600 |
| Electrical durability (Number of cycles) | | 200 | 200 | 200 | 200 | 100 |
| IP degree of protection (IP) | | 30 | 20 | 30 | 30 | 30 |
| Compatible NH Fuse links body size | | 00 | 00 | 1, 2 | 3 | solid links |

[1] For disconnectors 1-phase disconnected
[2] For disconnectors 3-phase disconnected
[3] With mechanical lock
[4] EBV3 can safely "switch" at 910A under AC22B condition

## Catalogue numbers structure

| Vertical fuse switch disconnector | NH Fuse link size | Mounting type | Poles | Switching type | Terminal clamps details | Electronic module or Lateral busbar |
|---|---|---|---|---|---|---|
| EBV | 00<br>2<br>3 | 11 = 185 mm busbar with heightened rails<br>23 = 100 mm busbar system<br>33 = 185 mm busbar system | 1 = one-pole<br>3 = three-pole | S = Each phase switching separately<br>T = Simultaneous 3 phase switching | M1 = Screw terminals with pressed nuts<br>M2 = Screw terminals with pressed nuts M12<br>S8 = Screw terminals with M8 Screws<br>V0 = V-terminals without V-clamps<br>V1 = V-terminals with V-clamps<br>W0 = 2-V Terminals without double V-clamps<br>W1 = 2-V Terminals with double V-clamps | -E = Electronic fuse monitoring module<br>-L = Lateral busbar terminal - Left side<br>- R = Lateral busbar terminal - Right side |

Miscellaneous part: EBV3-12150-3-2M-L and EBV3-1250-3-3M-R see details page 64



Catalogue number **EBV233SV1** represents a vertical fuse switch disconnector, for NH Fuse link size **2,** suitable for 185 mm busbar system **33,** each phase switching separately **S**, with V-terminals and V-clamps **V1**.

Example: EBV233SV1

| Ordering code information | Type designation | | | | | |
|---|---|---|---|---|---|---|
| Product type | EBV | | | | | |
| NH Fuse link size | | 2 | | | | |
| Mounting type | | | 3 | | | |
| Number of poles | | | | 3 | | |
| Simultaneous or separate switching | | | | | S | |
| Terminal clamps | | | | | | V1 |
| Complete part numbers | EBV | 2 | 3 | 3 | S | V1 |

# EBV00 Vertical fuse switch disconnector, size 00, 160 A, 690 V, 100 mm busbar system

For installation on 100 mm busbar system
Fuse switch disconnector's width 50 mm
Three pole switching - all phases simultaneously

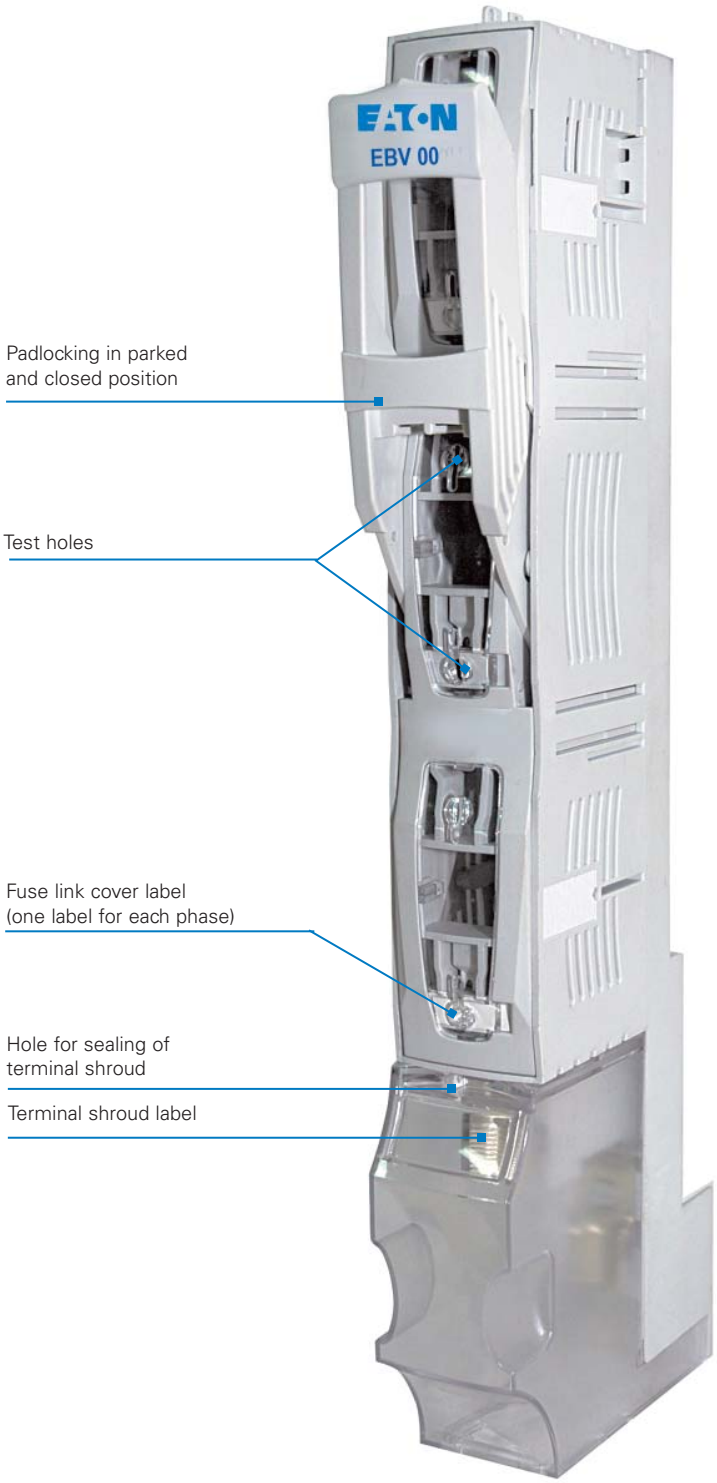


EBV 00/100 mm

# EBV00 Vertical fuse switch disconnector, size 00, 160 A, 690 V, 100 mm busbar system

## EBV00 / 100 mm busbar system - Technical data

| Description | EBV00 / 100 mm | |
|---|---|---|
| Rated thermal current $I_{th}=I_n$ | 160 A | |
| Rated voltage $U_n$ | 690 V a.c. | |
| Utilisation category | AC-22B | AC-23B |
| Rated switching voltage $U_e$ | 690 V a.c. | 400 V a.c. |
| Rated switching current $I_e$ | 160 A | |
| Rated short circuit making current | 25 kA | |
| Rated short circuit withstand current | 100 kA | |
| Rated insulation voltage $U_i$ | 1000 V | |
| Rated impulse withstand voltage $U_{imp.}$ | 8 kV | |
| Rated frequency | 50-60 Hz | |
| Mechanical durability (number of cycles) | 1600 | |
| Electrical durability (number of cycles | 200 | |
| IP degree of protection (IP) | 30 | |
| Compatible NH Fuse link body size | 00 | |
| Accessories see page 72 | | |

EBV

## EBV00 - Catalogue numbers

| 100 mm busbar system | | Weight |
|---|---|---|
| Three pole switching - all phases simultaneously (for installation on 100 mm busbar system) | | |
| EBV0023TS8 | cable terminals: bridge terminals with bridge clamps (S) 4-70 mm², screw terminals with M8 screws | 1,3 kg |
| EBV0023TV1 | cable terminals: V-terminals with V-clamps 25-120 SW | 1,5 kg |
| EBV0023TV0 | cable terminals: V-terminals, without V-clamps | 1,3 kg |

## EBV00 Terminal clamps details

| Description | | | | |
|---|---|---|---|---|
| Clamp | S-bridge clamp 2 x M5 x 25 | M8 screw* | V-clamp 25-120 SW | HM 10-120 |
| | | | | *** |
| Outline drawing | 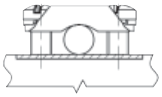 | 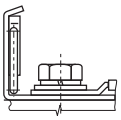 | 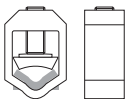 | 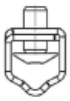 |
| Cross –section of conductors | 4 - 70 mm² | Conductor with lug terminal max 185 mm² | re ● 16 mm² - 95 mm²<br>se ◆ 25 mm² - 120 mm²<br>rm ⊗ 16 mm² - 95 mm²<br>sm ◆ 25 mm² - 120 mm² | re ● 10 mm² - 70 mm²<br>se ◆ 20 mm² - 120 mm²<br>rm ⊗ 10 mm² - 70 mm²<br>sm ◆ 25 mm² - 95 mm² |
| Tightening torque | 3 Nm** | 12 Nm** | 20 Nm** | 15 Nm** |

For stranded conductors using cable ferrules is recommended
*) Busbars of maximum width of 20 mm and maximum thickness of 5 mm can be fixed to M type screw terminals.
**) using torque wrench is recommended
***) fuse switch disconnectors with V-terminals are equipped with steel V-clamp HM 10-120 on request
Recommend using Eaton V-terminals only. Minimum tightening torque (M8 screw) for screws fixing fuse switch disconnector to busbar system –12 Nm, recommended tightening torque for screws and nuts with property class 8.8 – 21 Nm

# EBV00 Vertical fuse switch disconnector, size 00, 160 A, 690 V, 185 mm busbar system

For installation on 185 mm busbar system
Fuse switch disconnector's width 50 mm
Three pole switching - all phases simultaneously - two-hand operation
or one pole switching - each phase independently

## EBV00 / 185 mm busbar system - Technical data

| Description | EBV00 / 185 mm | |
|---|---|---|
| Rated thermal current $I_{th}=I_n$ | 160 A | |
| Rated voltage $U_n$ | 690 V a.c. | |
| Utilisation category | AC-22B | AC-23B |
| Rated switching voltage $U_e$ | 690 V | 400 V |
| Rated switching current $I_e$ | 160 A | |
| Rated short circuit making current | 80 kA (690 V a.c.) | |
| | 100 kA (400 V a.c.) | |
| Rated short circuit withstand current | 80 kA (690 V a.c.) | |
| | 100 kA (400 V a.c.) | |
| Rated insulation voltage $U_i$ | 1000 V a.c. | |
| Rated impulse withstand voltage $U_{imp.}$ | 12 kV | |
| Rated frequency | 50-60 Hz | |
| Mechanical durability (Number of cycles) | 1600 | |
| Electrical durability (Number of cycles) | 200 | |
| IP degree of protection (IP) | 20 | |
| Compatible NH Fuse link body size | 00 | |
| Accessories see page 72 | | |

EBV 00-S

EBV 00-T

## EBV00 - Catalogue numbers

| 185 mm busbar system | | Weight |
|---|---|---|
| Three-pole switching - each phase independently | | |
| EBV0033SS8 | Cable terminals: bridge terminals with bridge clamps (S) 4-70 mm², screw terminals with M8 screws | 2,6 kg |
| EBV0033SV1 | Cable terminals: V-terminals with V-clamps 25-120 SW | 2,7 kg |
| EBV0033SV0 | Cable terminals: V-terminals, without V-clamps | 2,6 kg |
| Three-pole switching - all phases simultaneously | | |
| EBV0033TS8 | Cable terminals: bridge terminals with bridge clamps (S) 4-70 mm², screw terminals with M8 screws | 2,7 kg |
| EBV0033TV1 | Cable terminals: V-terminals with V-clamps 25-120 SW | 2,8 kg |
| EBV0033TV0 | Cable terminals: V-terminals, without V-clamps | 2,7 kg |
| **EBV 00 with heightened rails adjusted to front line and terminal cover of EBV 2, 3** | | |
| One-pole switching - each phase independently | | |
| EBV0011SS8 | Cable terminals: bridge terminals with bridge clamps (S) 4-70 mm², screw terminals with M8 screws | 2,7 kg |
| EBV0011SV1 | Cable terminals: V-terminals with V-clamps 25-120SW | 2,8 kg |
| EBV0011SV0 | Cable terminals: V-terminals, without V-clamps | 2,7 kg |
| One-pole switching - all phases simultaneously | | |
| EBV0011TS8 | Cable terminals: bridge terminals with bridge clamps (S) 4-70 mm², screw terminals with M8 screws | 2,8 kg |
| EBV0011TV1 | Cable terminals: V-terminals with V-clamps 25-120 SW | 2,9 kg |
| EBV0011TV0 | Cable terminals: V-terminals, without V-clamps | 2,8 kg |

# EBV00 Vertical fuse switch disconnector, size 00, 160 A, 690 V, 185 mm busbar system

## EBV00 / 185 mm busbar system - Terminal clamps details

| Description | | | | |
|---|---|---|---|---|
| Clamp | S-bridge clamp 2 x M5 x 25 | M8 screw* | V-clamp 25-120 SW | HM 10-120 |
| | | | | *** |
| Outline drawing | 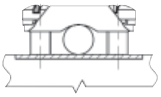 | 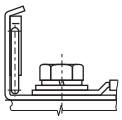 | 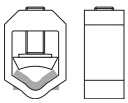 | |
| Cross–section of conductors | 4 - 70 mm² | Conductor with lug terminal max 185 mm² | re ● 16 mm² - 95 mm²<br>se ◆ 25 mm² - 120 mm²<br>rm ⊗ 16 mm² - 95 mm²<br>sm ⊕ 25 mm² - 120 mm² | re ● 10 mm² - 70 mm²<br>se ◆ 25 mm² - 120 mm²<br>rm ⊗ 10 mm² - 70 mm²<br>sm ⊕ 25 mm² - 95 mm² |
| Tightening torque | 3 Nm** | 12 Nm** | 20 Nm** | 15 Nm** |

For stranded conductors using cable ferrules is recommended
*) Busbar of maximum width of 20 mm and maximum thickness of 5 mm can be fixed to M-type screw terminals
**) Using torque wrench is recommended
***) Fuse switch disconnectors with V-terminals are equipped with steel V-clamp HM 10-120 on request
Recommend using Eaton V-terminals only. Minimum tightening torque (M8 screw) for screws fixing fuse switch disconnector to busbar system – 12 Nm, recommended tightening torque for screws and nuts with property class 8.8 – 21 Nm

EBV 00 version with heightened rails, adjusted to front line and terminal cover of EBV 1, 2, 3 without using adaptor

Installation on busbar system with use of hooked clamps

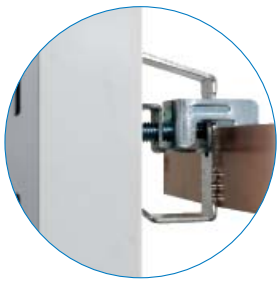

Or screws

Fuse switch disconnector with cable terminals at the top

Parking position

EBV00-S

EBV00-T

EBV00-T

EBV00-S

# Vertical fuse switch disconnector, EBV2 size 2, 400 A and EBV3 size 3 630 A, 690 V a.c. 185 mm busbar system

For installation on 185 mm busbar system

Fuse switch disconnector's width 100 mm

Three pole switching - all phases simultaneously or one pole switching - each phase independently

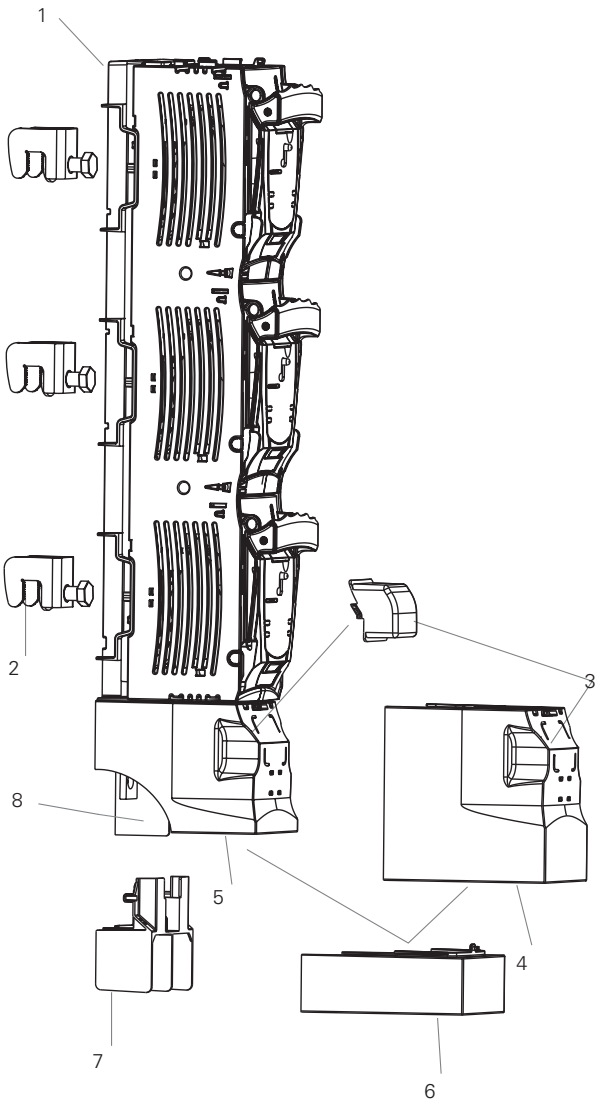


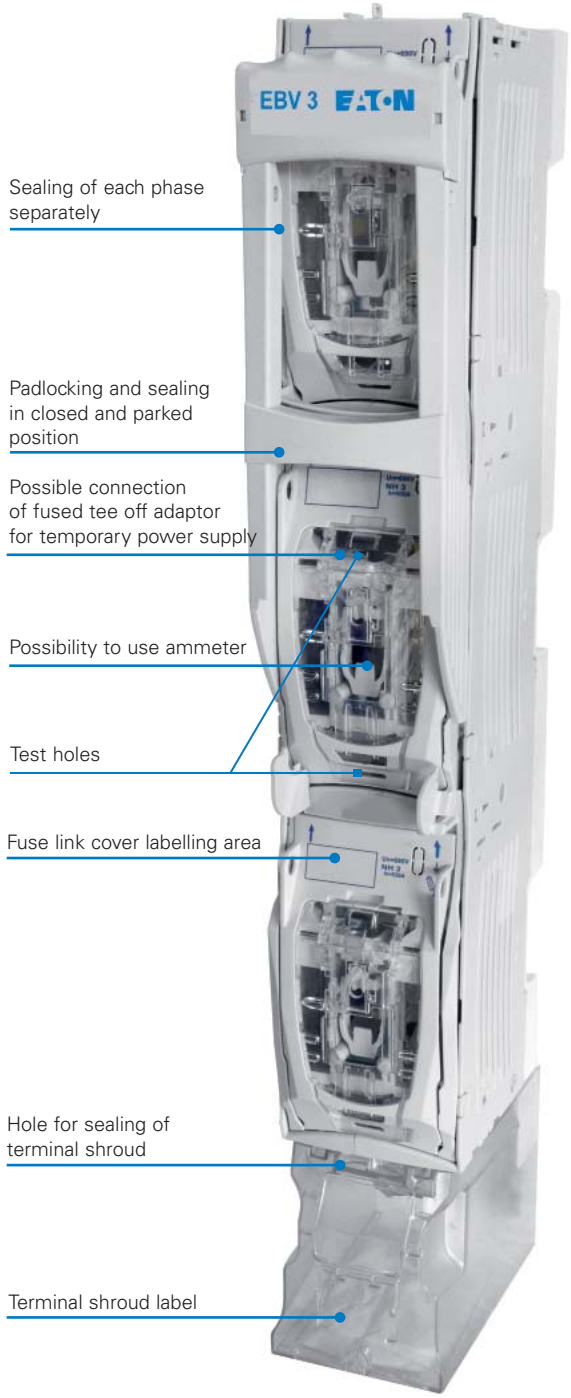


EBV3

**Description**

1 - Main base

2 - Hooked clamp – for installation on busbar system

3 - Terminal shroud for fuse switch disconnector with double V-clamps (2 x 240 mm²)

4 - Terminal shroud (long)

5 - Terminal shroud (short)

6 - Bottom adjusting shroud

7 - Cable terminal protective cover

8 - protective busbar barrier

# EBV2 Vertical fuse switch disconnector, size 2, 400 A, 690 V, 185 mm busbar system

Designed for operation with NH1 and NH2 fuse links

EBV233S EBV233T

## EBV2 / 185 mm busbar system - Technical data

| Description | EBV2 / 185 mm | |
|---|---|---|
| Rated thermal current $I_{th}=I_n$ with fuse links | 400 A | |
| Rated thermal current $I_{th}$ with solid links | 600 A | |
| Rated voltage $U_n$ | 690 V a.c. | |
| Utilisation category | AC-22B | AC-23B |
| Rated switching voltage $U_e$ | 690 V a.c. | 400 V a.c. |
| Rated switching current $I_e$ | 400 A | |
| Rated short circuit making current | 100 kA | |
| Rated short circuit withstand current | 100 kA | |
| Rated insulation voltage $U_i$ | 1000 V a.c. | |
| Rated impulse withstand voltage $U_{imp}$ | 12 kV | |
| Rated short time withstand current $I_{cw}$ | 12[1]/15[2] kA | |
| Rated frequency | 50-60 Hz | |
| Mechanical durability (number of cycles) | 1000 | |
| Electrical durability (number of cycles) | 200 | |
| IP degree of protection (IP) | 30 | |
| Compatible NH Fuse link body size | 1, 2 | |
| Accessories see page 73 | | |

[1] for disconnectors 1-phase disconnected
[2] for disconnectors 3-phase disconnected

EBV

## EBV2 - Catalogue numbers

| 185 mm busbar system | | Weight |
|---|---|---|
| Three-pole switching - each phase independently | | |
| EBV233SV1 | Cable terminals: V-terminals with V-clamps 240 mm² | 5,8 kg |
| EBV233SM1 | Cable terminals: screw terminals with pressed nuts M10 | 5,7 kg |
| EBV233SW1 | Cable terminals: 2V-terminals with double V-clamps 240 mm² | 6,4 kg |
| EBV233SV0 | Cable terminals: V-terminals without V-clamps | 5,5 kg |
| EBV223SW0 | Cable terminals: 2V-terminals without double V-clamps | 6,9 kg |
| Three-pole switching - all phases simultaneously | | |
| EBV233TV1 | Cable terminals: V-terminals with V-clamps 240 mm² | 5,8 kg |
| EBV233TM1 | Cable terminals: screw terminals with pressed nuts M10 | 5,7 kg |
| EBV233TW1 | Cable terminals: 2V-terminals with double V-clamps 240 mm² | 6,4 kg |
| EBV233TV0 | Cable terminals: V-terminals without V-clamps | 5,5 kg |
| EBV233TW0 | Cable terminals: 2V-terminals without double V-clamps | 5,9 kg |

## EBV2 - Terminal clamps details

| Description | EBV 2 V-Clamps (400 A) | | EBV 2 Double V-Clamps | | EBV 2 with M10 screw |
|---|---|---|---|---|---|
| Clamp | V-clamp | | V-clamp HS | | M10 screw (pressed nut)* |
| Outline drawing | 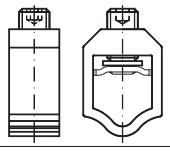 | | 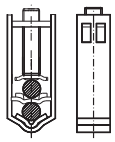 | | |
| Cross-section of conductors | V-clamp for direct fixing of conductor with busbar end with crosssection of: | | | | |
| | 35 - 185 mm² | 35 - 240 mm² | 35 - 185 mm² | 35 - 240 mm² | |
| | 35 - 240 mm² | 35 - 300 mm² | 35 - 240 mm² | 35 - 300 mm² | |
| Tightening torque | 30 Nm | | 40 Nm | | 32 Nm |

For stranded conductors using cable ferrules is recommended
*) Busbars of maximum width of 40 mm and maximum thickness of 8 mm can be fixed to M type screw terminals when protective busbar barrier between phases is installed.
Recommend using Eaton V-terminals only. Minimum tightening torque (M12 screw) for screws fixing fuse switch disconnector to busbar system – 32 Nm, recommended tightening torque for screws and nuts with property class 8.8 – 56 Nm

# EBV3 Vertical fuse switch disconnector, size 3, 630 A, 690 V, 185 mm busbar system

## EBV3 / 185 mm busbar system - Technical data

| Description | EBV3 / 185 mm | | |
|---|---|---|---|
| Rated thermal current $I_{th}=I_n$ with fuse links | 630 A | | |
| Rated thermal current $I_{th}$ with solid links | 750 A | | |
| Rated voltage $U_n$ | 690 V a.c. | | |
| Utilisation category | AC-22B | AC-23B | AC-21B |
| Rated switching voltage $U_e$ | 500 V a.c. | 400 V a.c. | 690 V a.c. |
| Rated switching current $I_e$ | 630 A | | |
| Rated short circuit making current | 80 kA (690 V a.c.) | | |
| | 100 kA (500 V a.c.) | | |
| Rated short circuit withstand current | 100 kA | | |
| Rated insulation voltage $U_i$ | 1000 V a.c. | | |
| Rated impulse withstand voltage $U_{imp}$. | 12 kV | | |
| Rated short time withstand current $I_{cw}$ | 12[1]/15[2] kA | | |
| Rated frequency | 50-60 Hz | | |
| Mechanical durability (Number of cycles) | 1000 | | |
| Electrical durability (Number of cycles) | 200 | | |
| IP degree of protection | 30 IP | | |
| Compatible NH Fuse link body size | 3 | | |
| Accessories see page 73 | | | |

[1] for disconnectors 1-phase disconnected
[2] for disconnectors 3-phase disconnected

EBV333S EBV333T

## EBV3 - Catalogue numbers

| 185 mm busbar system | | Weight |
|---|---|---|
| Three-pole switching - each phase independently | | |
| EBV333SV1 | Cable terminals: V-terminals with V-clamps 240 mm² | 6,6 kg |
| EBV333SM2 | Cable terminals: screw terminals with pressed nuts M12 | 6,5 kg |
| EBV333SW1 | Cable terminals: 2V-terminals with double V-clamps 240 mm² | 7,2 kg |
| EBV333SV0 | Cable terminals: V-terminals without V-clamps | 6,3 kg |
| EBV333SW0 | Cable terminals: 2V-terminals without double V-clamps | 6,7 kg |
| Three pole switching - all phases simultaneously | | |
| EBV333TV1 | Cable terminals: V-terminals with V-clamps 240 mm² | 6,6 kg |
| EBV333TM2 | Cable terminals: screw terminals with pressed nuts M12 | 6,5 kg |
| EBV333TW1 | Cable terminals: 2V-terminals with double V-clamps 240 mm² | 7,2 kg |
| EBV333TV0 | Cable terminals: V-terminals without V-clamps | 6,3 kg |
| EBV333TW0 | Cable terminals: 2V-terminals without double V-clamps | 6,7 kg |

## EBV3 - Terminal clamps details

| Description | EBV 3 V-clamps | | EBV 3 Double V-Clamps | | EBV 3 M12 Screws |
|---|---|---|---|---|---|
| Clamp | V-clamp 35-300SW-B | | V-clamp HS 2/35 240-C | | M12 screw (pressed nut) |
| Outline drawing | 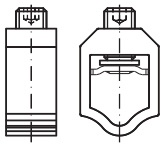 | | 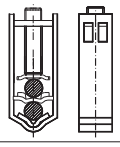 | | |
| Cross section of conductors | V-clamp for direct fixing of conductor with busbar end with cross section of: | | | | |
| | 35 - 185 mm² | 35 - 240 mm² | 35 - 185 mm² | 35-240 mm² | |
| | 35 - 240 mm² | 35 - 300 mm² | 35 - 240 mm² | 35 - 300 mm² | |
| Tightening torque | 30 Nm | | 40Nm | | 56 Nm |

For stranded conductors using cable ferrules is recommended
*) Busbars of maximum width of 40 mm and maximum thickness of 8 mm can be fixed to M type screw terminals when protective busbar barrier between phases is installed.
Recommend using Eaton V-terminals only. Minimum tightening torque (M12 screw) for screws fixing fuse switch disconnector to busbar system – 32 Nm, recommended tightening torque for screws and nuts with property class 8.8 – 56 Nm

# EBV2 and EBV3 Fuse switch disconnector with lateral busbar terminal*

## EBV2 and EBV3 - Technical data

| Description | EBV2 | EBV3 |
|---|---|---|
| Rated thermal current $I_{th}=I_n$ | 400 A | 630 A |
| Rated voltage $U_n$ | 690 V a.c. | 690 V a.c. |
| Utilisation category | AC-22B | AC-22B |
| Rated switching voltage $U_e$ | 690 V a.c. | 500 V a.c. |
| Rated switching current $I_e$ | 400 A | 630 A |
| Rated short circuit making current | 100 kA | 100 kA |
| Rated short circuit withstand current | 100 kA | 100 kA |
| Rated insulation voltage $U_i$ | 1000 V a.c. | 1000 V a.c. |
| Rated impulse withstand voltage $U_{imp.}$ | 12 kV | 12 kV |
| Rated frequency | 50-60 Hz | 50-60 Hz |
| Mechanical durability (number of cycles) | 1000 | 1000 |
| Electrical durability (number of cycles) | 200 | 200 |
| IP degree of protection (IP) | 30 | 30 |
| Compatible NH Fuse link body size | 2 | 3 |
| Accessories see page 73 | | |

Lateral busbar terminals

## EBV2 and EBV3 - Catalogue numbers

| 185 mm busbar system | | Weight |
|---|---|---|
| **Fuse switch disconnectors EBV2 - 400A** | | |
| Three-pole switching - each phase independently | | |
| EBV233SM2-L | Cable terminals: screw terminals with pressed nuts M12, lateral busbar terminal - left side | 5,1 kg |
| EBV233SM2-R | Cable terminals: screw terminals with pressed nuts M12, lateral busbar terminal - right side | 5,1 kg |
| Three-pole switching - all phases simultaneously | | |
| EBV233TM2-L | Cable terminals: screw terminals with pressed nuts M12, lateral busbar terminal - left side | 5,1 kg |
| EBV233TM2-R | Cable terminals: screw terminals with pressed nuts M12, lateral busbar terminal - right side | 5,1 kg |
| **Fuse switch disconnectors EBV3 – 630 A** | | |
| Three-pole switching - each phase independently | | |
| EBV333SM2-L | Cable terminals: screw terminals with pressed nuts M12, lateral busbar terminal - left side | 5,9 kg |
| EBV333SM2-R | Cable terminals: screw terminals with pressed nuts M12, lateral busbar terminal - right side | 5,9 kg |
| Three pole switching - all phases simultaneously | | |
| EBV333TM2-L | Cable terminals: screw terminals with pressed nuts M12, lateral busbar terminal - left side | 5,9 kg |
| EBV333TM2-R | Cable terminals: screw terminals with pressed nuts M12, lateral busbar terminal - right side | 5,9 kg |
| **Fuse switch disconnectors EBV3 – 1250 A** | | |
| Three pole switching - all phases simultaneously | | |
| EBV3-1250-3-2M-L | Switch-disconnector 1250 A , equipped with solid-links 1250 A<br>Cable terminals: screw terminals with pressed nuts M12, lateral busbar terminal - left side | 7 kg |
| EBV3-1250-3-3M-R | Switch-disconnector 1250 A , equipped with solid-links 1250 A<br>Cable terminals: screw terminals with pressed nuts M12, lateral busbar terminal - right side | 7 kg |

## EBV2 and EBV3 with lateral busbar terminals terminal clamps details

| Description | EBV 2-x-NL (400 A) | EBV 2-x-NR (400 A) | EBV 3-x-NL (630 A) | EBV 3-x-NR (630 A) |
|---|---|---|---|---|
| Clamp | M12 screw | M12 screw | M12 screw | M12 screw |
| Outline drawing | | | | |
| Lateral busbar terminal | Left side | Right side | Left side | Right side |
| Tightening torque | 56 Nm | 56 Nm | 56 Nm | 56 Nm |

*EBV 2 and 3 with lateral busbar terminal available upon request. Please contact Eaton's application engineering department for further details: buletechnical@eaton.com

# EBV with electronic fuse monitoring module

### Electronic fuse monitoring module

Fuse switch disconnector can be equipped with electronic fuse monitoring module. Fuse link status (operational, operated, loss of voltage) is indicated by light-emittng diodes and status of relay contacts.

### Principle of operation

- L1, L2, L3 diodes are on - all three phases are supplied, all fuse links are operational. Relay contacts: [21..22] - closed; [13..14] - opened
- L1, L2, L3 diodes are flashing - all three phases are supplied, fuse links operated Relay contacts: [21..22] - opened; [13..14] - closed
- L1, L2, L3 diodes are off - two or more phases are not supplied or fuse links are removed. Relay contacts: [21..22] - opened; [13..14] – closed

### Nominal parameters

- Operating voltage AC - 400 - 690 V, 40-60 Hz;
- Relay parameters 5 A , 250 V~

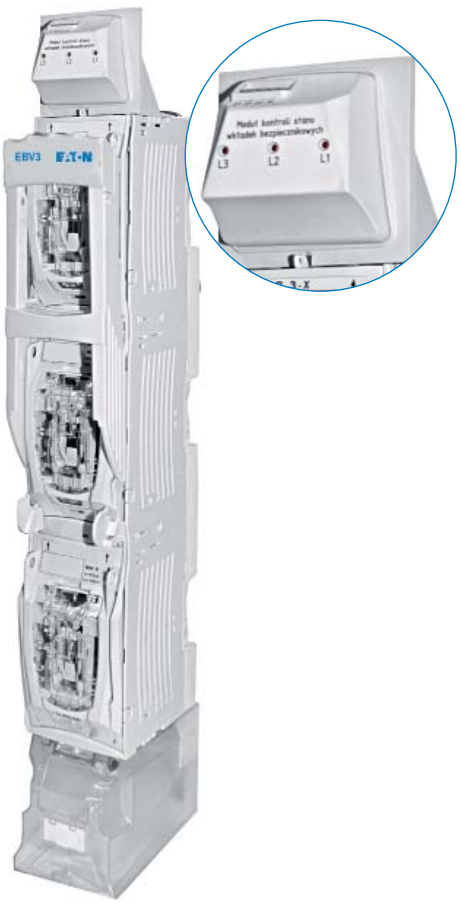


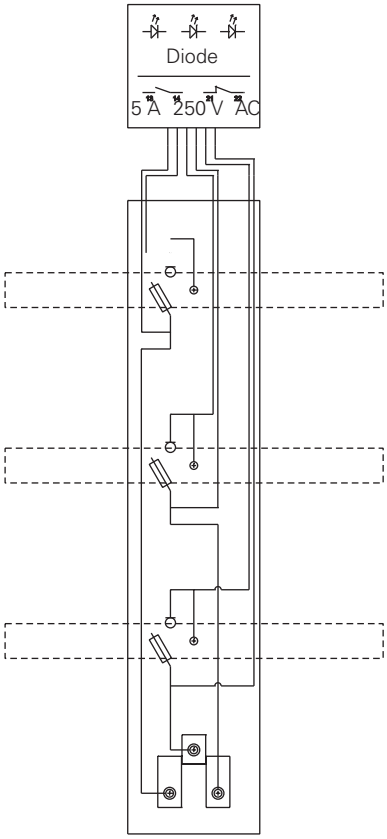


EBV with electronic fuse monitoring module available upon request. Please contact Eaton's application engineering department for further details: buletechnical@eaton.com

# EBV with electronic fuse monitoring module

## Catalogue numbers

| Catalogue number | Description | Weight |
|---|---|---|
| **Fuse switch disconnectors EBV2 - 400 A** | | |
| For installation on 185 mm busbar system, one pole switching - each phase independently | | |
| EBV233SV1-E | Cable terminals: V-terminals with V-clamps 240 mm² | 5,9 kg |
| EBV233SM1-E | Cable terminals: screw terminals with pressed nuts M10 | 5,8 kg |
| EBV233SW1-E | Cable terminals: 2V-terminals with double V-clamps 240 mm² | 6,5 kg |
| EBV233SV0-E | Cable terminals: V-terminals without V-clamps | 5,6 kg |
| EBV233SW0-E | Cable terminals: 2V-terminals without double V-clamps | 6,0 kg |
| For installation on 185 mm busbar system, three pole switching - all phases simultaneously | | |
| EBV233TV1-E | Cable terminals: V-terminals with V-clamps 240 mm² | 5,9 kg |
| EBV233TM1-E | Cable terminals: screw terminals with pressed nuts M10 | 5,8 kg |
| EBV233TW1-E | Cable terminals: 2V-terminals with double V-clamps 240 mm² | 6,5 kg |
| EBV233TV0-E | Cable terminals: V-terminals without V-clamps | 5,6 kg |
| EBV233TW0-E | Cable terminals: 2V-terminals without double V-clamps | 6,0 kg |
| **Fuse switch disconnectors EBV3 – 630 A** | | |
| For installation on 185 mm busbar system, one pole switching - each phase independently | | |
| EBV333SV1-E | Cable terminals: V-terminals with V-clamps 240 mm² | 6,7 kg |
| EBV333SM2-E | Cable terminals: screw terminals with pressed nuts M12 | 6,6 kg |
| EBV333SW1-E | Cable terminals: 2V-terminals with double V-clamps 240 mm² | 7,3 kg |
| EBV333SV0-E | Cable terminals: V-terminals without V-clamps | 6,4 kg |
| EBV333SW0-E | Cable terminals: 2V-terminals without double V-clamps | 6,8 kg |
| For installation on 185 mm busbar system, three pole switching - all phases simultaneously | | |
| EBV333TV1-E | Cable terminals: V-terminals with V-clamps 240 mm² | 6,7 kg |
| EBV333TM2-E | Cable terminals: screw terminals with pressed nuts M12 | 6,6 kg |
| EBV333TW1-E | Cable terminals: 2V-terminals with double V-clamps 240 mm² | 7,3 kg |
| EBV333TV0-E | Cable terminals: V-terminals without V-clamps | 6,4 kg |
| EBV333TW0-E | Cable terminals: 2V-terminals without double V-clamps | 6,8 kg |



EBV with electronic fuse monitoring module available upon request. Please contact Eaton's application engineering department for further details: buletechnical@eaton.com

# EBV Vertical fuse switch disconnectors - Outline drawings (mm)

**EBV00 / 100 mm , EBV00-1 , EBV00-3**

**CLOSED**

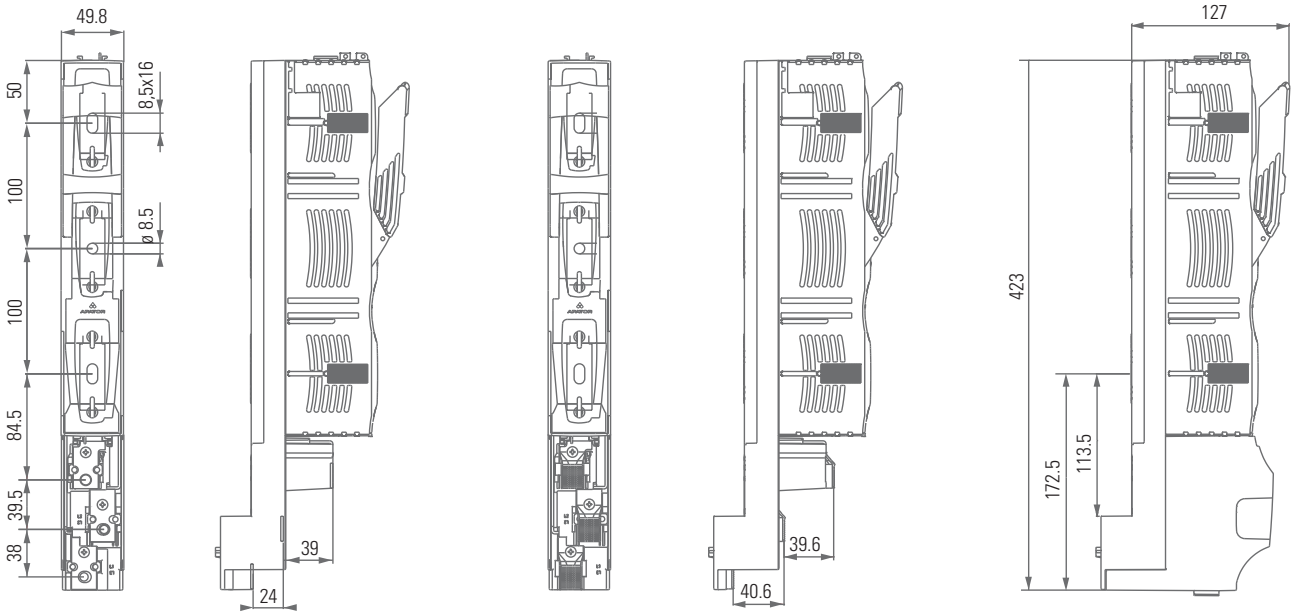


**OPENED**

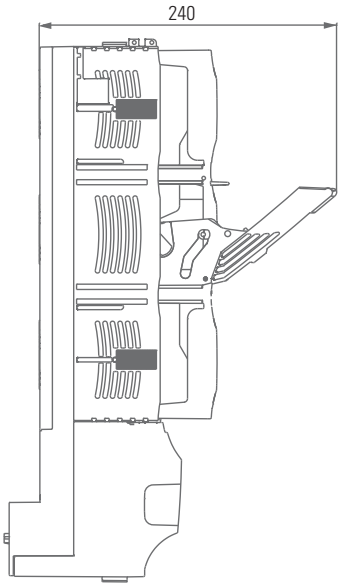


**PARKED**

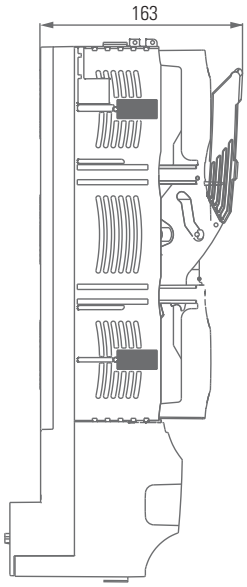

# EBV Vertical fuse switch disconnectors - Outline drawings (mm)

**EBV00/100 mm , EBV00-1 , EBV00-3 Closed 3-phase**

**CLOSED**

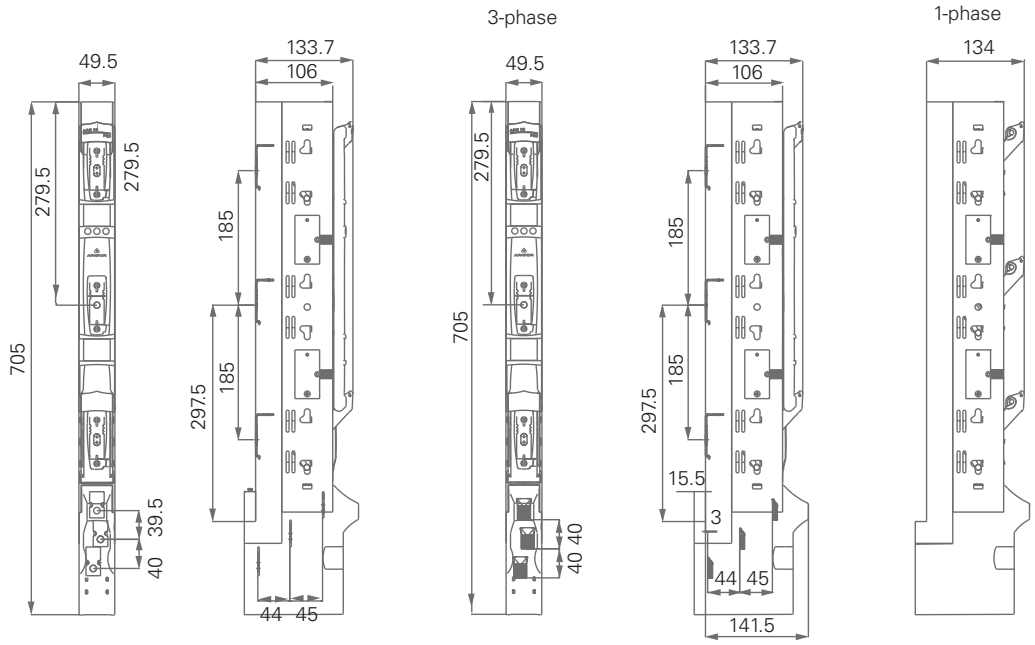


**OPENED**

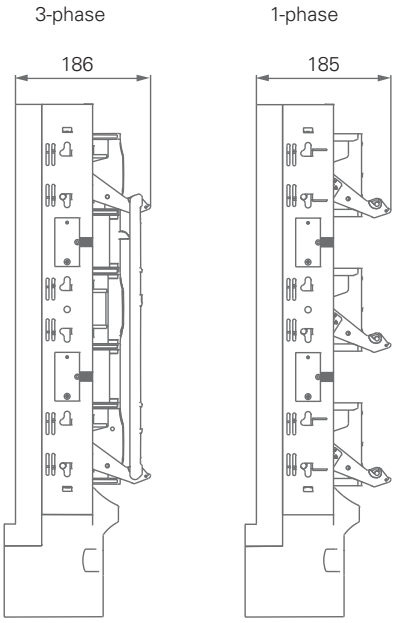


**PARKED**

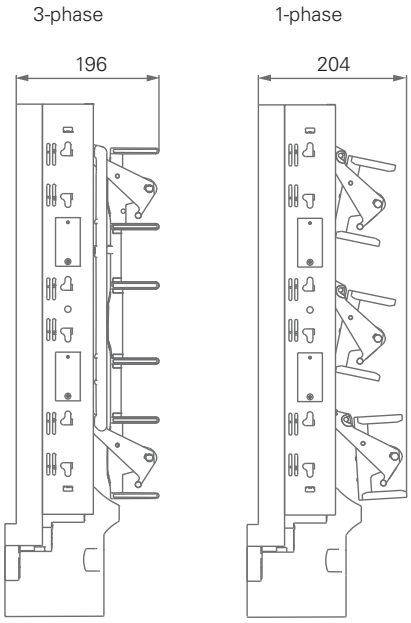


**EBV WITH HEIGHTENED RAILS**

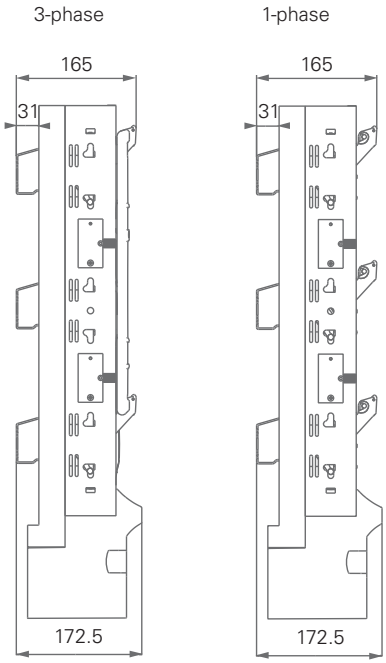

# EBV Vertical fuse switch disconnectors - Outline drawings (mm)

**EBV2 and EBV3**

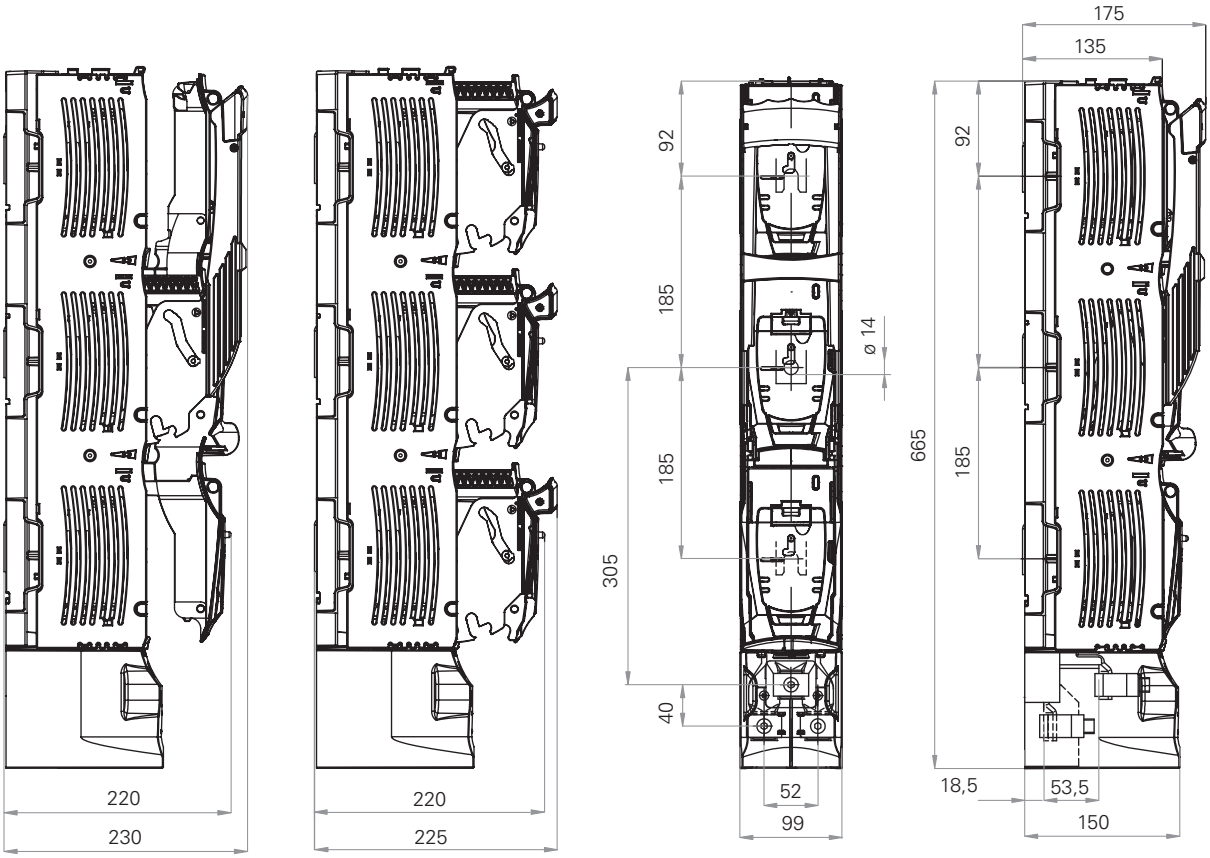


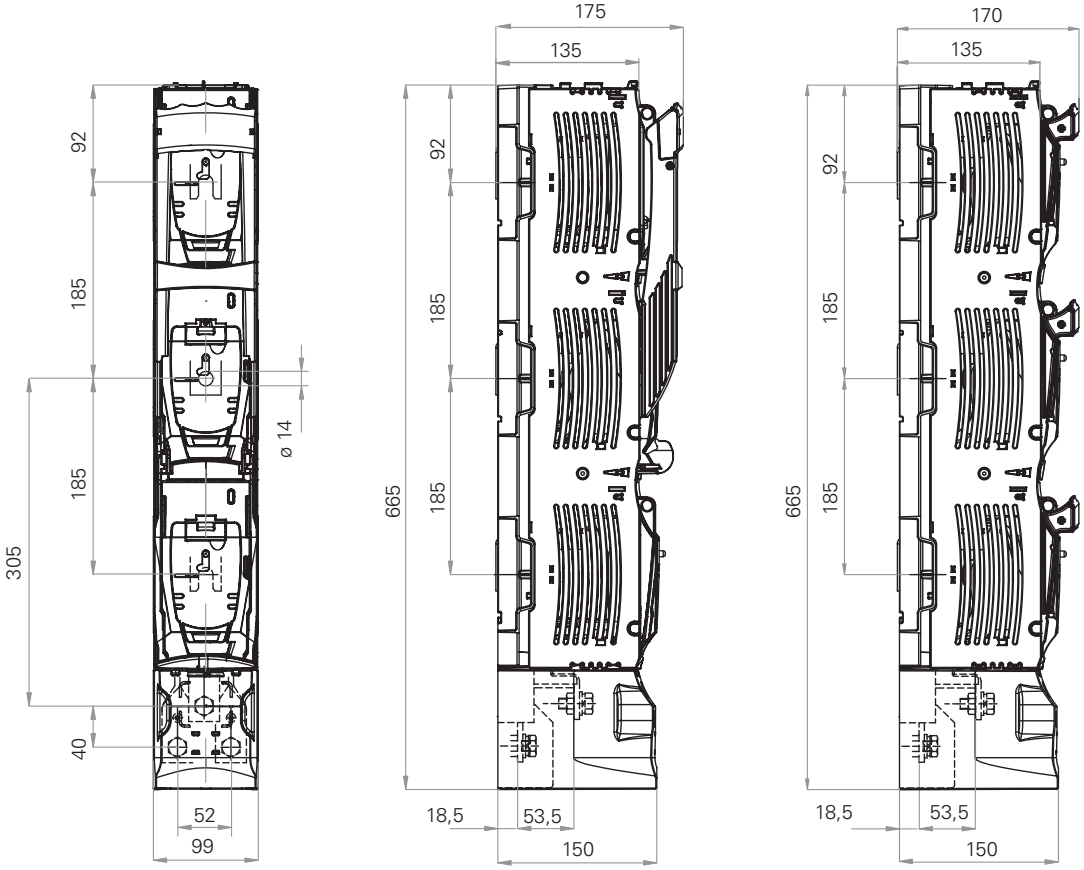

# EBV Vertical fuse switch disconnectors - Outline drawings (mm)

**EBV3 with terminals 2V (2 x 240 mm²)**

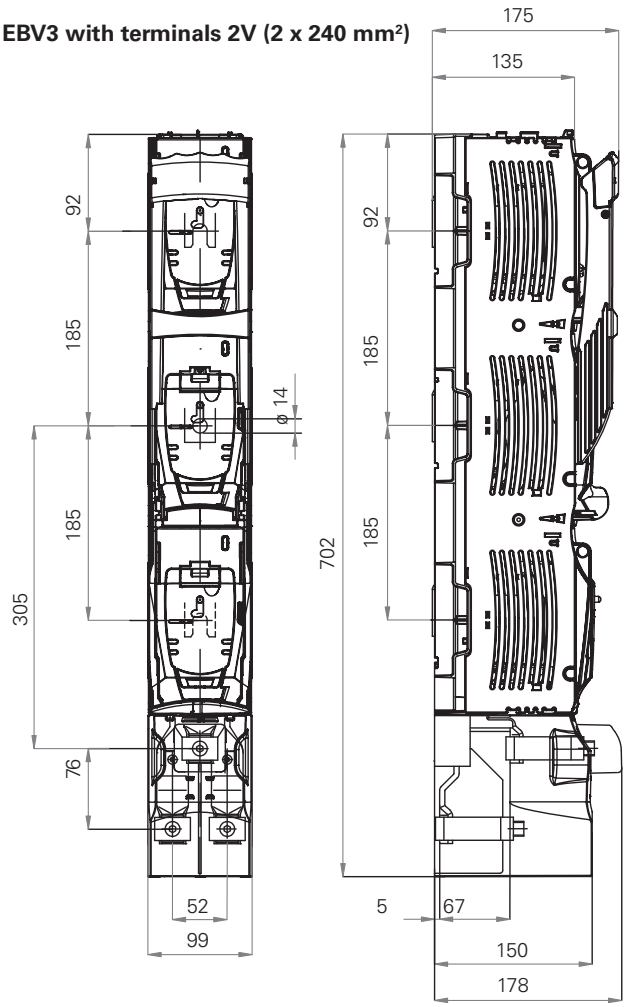


**EBV2-E, EBV3-E Electronic module**

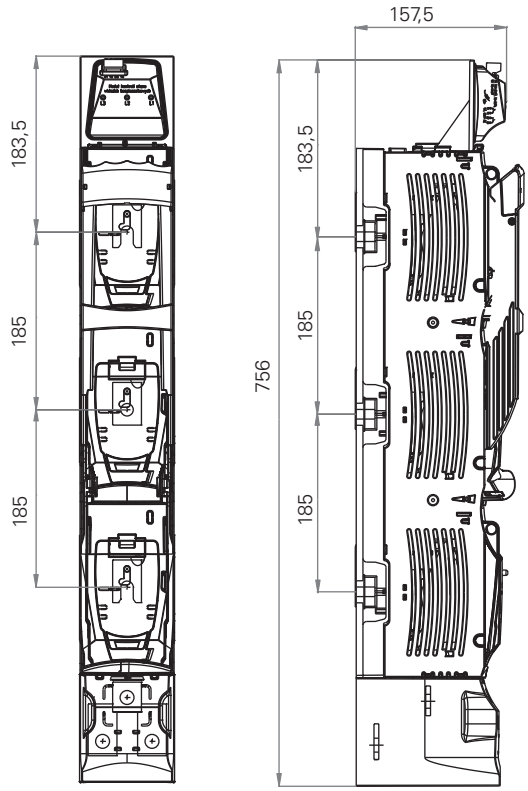


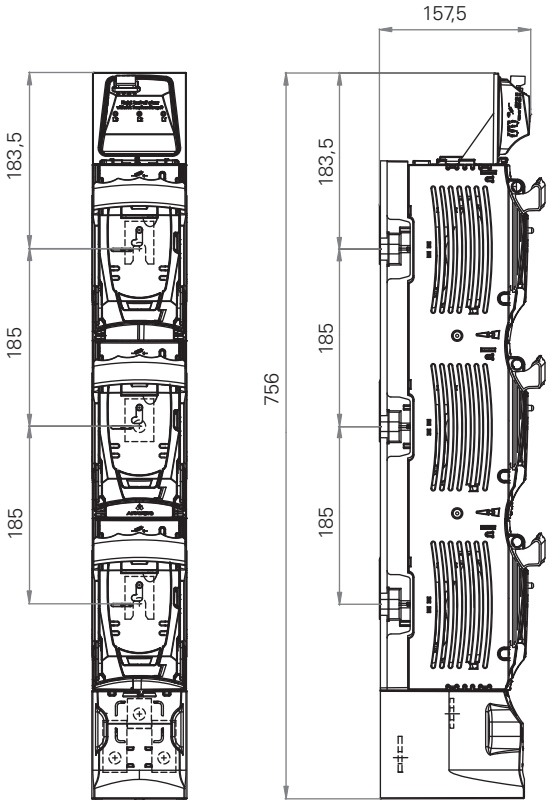

# EBV Vertical fuse switch disconnectors - Outline drawings (mm)

**EBV2 , EBV3  with lateral busbar terminal**

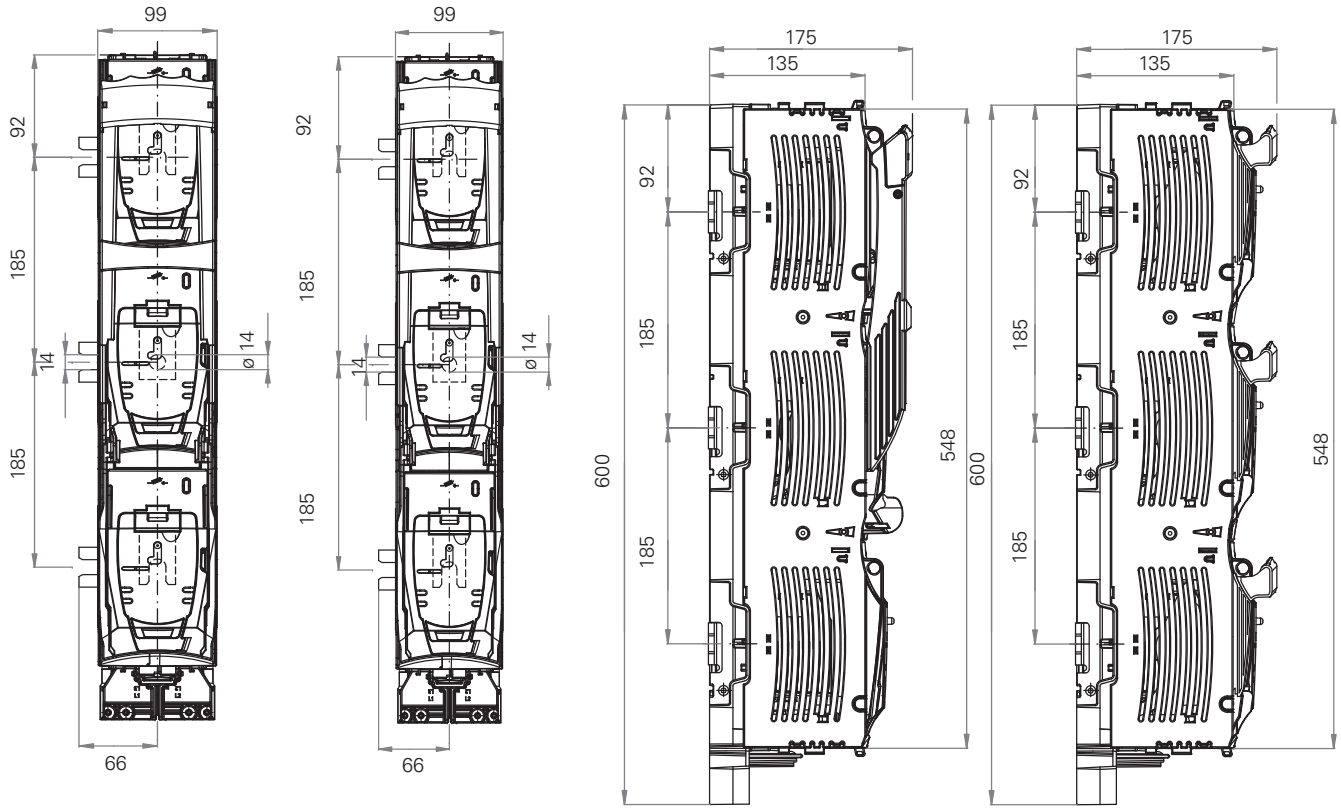

# EBV Vertical fuse switch disconnectors - Accessories

## EBV00, EBV00 / 100 mm

### EBFVA1 - M8 Terminal screw

M8 terminal screw, for connection of conductors with lug terminal (set - 3 pcs.)

### EBFVA2 - Busbar shroud

Busbar shroud (polycarbonate) for busbar system 185 mm, Width 50 mm, length 562 mm, thickness 3 mm



### EBFVA4 - Isolating pin

Isolating pin for fixing the 50 mm busbar shroud, M8 (set – 2 pcs.)

### EBFVA6 - S-Bridge clamp

S-Bridge clamp – fixed with 2 x M5 screw - for connection of conductors with cross-section 4 mm² up to 70 mm² (set – 3 pcs.)

### EBFVA7 - V-shape clamp

V-shape clamp – S-bridge clamp + V-shape saddle - for connection of sector-shaped conductors with cross-section 1,5 up to 70 mm² (stranded) or 95 mm² (solid) (set - 3 pcs.)

### EBFVA8 - Universal earthing device

Universal earthing device for EBV 00, 2, 3

### EBFVA32 - V-Clamp 25-120 SW

V-clamp 25-120 SW. For connection of conductor with cross-section:

| | | | |
|---|---|---|---|
| 16 - 95 mm² | ● | 16 - 95 mm² | ⊗ |
| 25 - 120 mm² | ◆ | 25 - 120 mm² | ⊗ |

### EBFVA9 - V-clamp HM-10-120

V-clamp HM-10-120. For connection of conductor with cross-section:

| | | | |
|---|---|---|---|
| 10 - 70 mm² | ● | 10 - 70 mm² | ⊗ |
| 25 - 120 mm² | ◆ | 25 - 95 mm² | ⊗ |

### EBFVA3 - Hooked clamps

Hooked clamps for installation of EBV on busbar system without drilled holes. (set - 3 pcs.)

## EBV00 / 100 mm

### EBFVA33 - Micro switch

Micro switch for fuse link cover position monitoring (0-1) of EBV 00/100mm

### EBFVA34 - Support angle

Support angle for installation of busbar shroud

## EBV00 / 100 mm

### EBFVA35 - Labelling area

Labelling area

### EBFVA10 - Terminal shroud/adjusting shroud

Terminal shroud/adjusting shroud. When fixed top and bottom of EBV 00/100 mm it adjusts its length and height to that of EBV 2, 3 enclosure

### EBFVA36 - Extended terminal shroud/adjusting shroud

Extended terminal shroud/adjusting shroud. Together with two shrouds it adjusts the length and height of EBV 00/100 mm to that of EBV 1, 2, 3 with terminal shroud

### EBFVA37 - Extended terminal shroud/adjusting shroud

Extended terminal shroud/adjusting shroud. When fixed to shroud it adjusts the length and height of EBV 00/100 mm to that of EBV 2, 3 with label holder 53-945826-011.

### EBFVA11 - Single adaptor

Single adaptor 100/185 enabling to install EBV 00/100 mm on busbar system 185 mm

### EBFVA12 - Double adaptor

Double adaptor 100/185 enabling to install two EBV 00/100 mm units on busbar system 185 mm

## EBV00

### EBFVA15 - Single distance adaptor

Single distance adaptor 185/185. It adjusts front line of EBV 00 to that of EBV 2,3 (set – 3 pcs.)

### EBFVA14 - Double distance adaptor

Double distance adaptor 185/185. Designed for two EBV 00 units. It adjusts front line of EBV 00 to that of EBV 2,3 (set – 3 pcs.)

### EBFVA16 - Terminal shroud

Terminal shroud

### EBFVA38 - Hooked clamps

Hooked clamps for installation of EBV with heightened rails on busbar system without drilled holes. (set - 3 pcs.)

# EBV Vertical fuse switch disconnectors - Accessories

| EBV2 , EBV3 , EBV630 kVA , EBV1250 | |
|---|---|
| Terminal screw | |
| For connection of conductors with lug terminal (1 set- 3pcs) | |
| EBFVA17 - M10 terminal screw for EBV1 and EBV2 | |
| EBFVA18 - M12 terminal screw for EBV3 | |
| EBFVA19 - V-clamp | |
| V-clamp. For connection of conductor with cross-section: | |
| 35 - 120 mm² 35 - 150 mm² | |
| 35 - 240 mm² 35 - 300 mm² | |
| EBFVA20 - V-clamp | |
| V-clamp. For connection of conductor with cross-section: | |
| 35 - 185 mm² 35 - 240 mm² | |
| 35 - 240 mm² 35 - 300 mm² | |
| EBFVA21 - Double V-clamp | |
| Double V-clamp. For connection of two conductors with cross-section: | |
| 35 - 185 mm² 35 - 240 mm² | |
| 35 - 240 mm² 35 - 300 mm² | |
| EBFVA23 - V-clamp HS | |
| V-clamp HS (steel) for connection of two conductors with cross-section | |
| 35 - 185 mm² 35 - 240 mm² | |
| 35 - 240 mm² 35 - 300 mm² | |
| EBFVA24 - Hooked clamps | |
| Hooked clamps for installation of EBV 2, 3 on busbar system without drilled holes (1 set - 3 pcs.) | |

| EBV2 , EBV3 , EBV630 kVA , EBV1250 | |
|---|---|
| EBFVA25 - Busbar shroud | |
| Busbar shroud (polycarbonate) for busbar system 185 mm, width 100 mm, length 562 mm, thickness 3 mm | |
| EBFVA26 - Isolating pin | |
| Isolating pin for fixing the 50 mm busbar shroud, M12 (1 set – 2 pcs.) | |
| EBFVA27 - Terminal shroud | |
| Terminal shroud | |
| EBFVA28 - Extended terminal shroud | |
| Extended terminal shroud, for use with terminal shroud below | |
| EBFVA29 - Terminal protective cover | |
| Terminal protective cover | |
| EBFVA8 - Universal earthing device | |
| Universal earthing device for EBV 00, 2, 3 | |
| EBFVA39 - Label holder | |
| Label holder | |

# NH DIN Fuse links overview

### Description

A square bodied range of NH DIN industrial fuse links for a wide variety of applications.

### Features and benefits

- Comprehensive portfolio: Standard metal gripping lugs and insulated metal gripping lugs versions are available
- Reliability: Dual indication for more reliable fault finding.
- Safety: Lead and cadmium free – they are RoHS and REACH compliant (not dangerous or hazardous for the environment).
- Energy efficient solutions: Class leading watts loss – helping to improve network efficiencies.

### Standards

IEC 60269-1 and 2, VDE 0636, DIN 43620 and CE.

## Low voltage — NH DIN Industrial fuse links gG

| | 400 Volts gG | 500 Volts gG | 690 Volts gG |
|---|---|---|---|
| | | | |
| **Catalogue numbers with conducting metal gripping lugs** | (amp)NHG(size)B-400 | (amp)NHG(size)B | (amp)NHG(size)B-690 |
| **Catalogue numbers with insulated metal gripping lugs** | (amp)NHG(size)BI-400 | (amp)NHG(size)BI | (amp)NHG(size)BI-690 |
| **Fuse link body size** | 000 to 3 | 000 to 4 | 000 to 4 |
| **Rated voltage** | 400 V a.c. | 500 V a.c. | 690 V a.c. |
| **Rated current** | 2 to 630 A | 2 to 1250 A | 2 to 800 A |
| **Operating Class** | gG | gG | gG |
| **Breaking capacity** | 120 kA AC | | |
| **Fuse bases** | Single pole SD -D DIN-Rail mounted and SD-S Screw mounting or TD-D DIN-Rail mounted (data sheet 10163) | | |
| **Fuse switches** | Fuse switch disconnectors vertical EBV and horizontal EBH (data sheets 10292 and 10293) | | |
| **Fuse rail** | Fuse rail vertical EBF (data sheet 10240) | | |
| **Standards** | IEC 60269-1 and 2, VDE 0636, DIN 43620 and CE | | |
| **Applications** | Alternative energy, utilities, industrial and motor applications | | |

Data sheets: 400V gG: 720099, 500V gG 10164, 690V gG 720109, 500 and 690V aM: 10165

## Low voltage — NH DIN Industrial fuse links aM

**500/690 Volts aM**

| | |
|---|---|
| **Catalogue numbers with conducting metal gripping lugs** | 500 Volts: (amp)NHM(size)B<br>690 Volts: (amp)NHM(size)B-690 |
| **Catalogue numbers with insulated metal gripping lugs** | N/A |
| **Fuse link body size** | 000 to 3 |
| **Rated voltage** | 500 and 690 V a.c. |
| **Rated current** | 6 to 500 A |
| **Operating Class** | aM |
| **Breaking capacity** | 120 kA AC |
| **Fuse bases** | Single pole SD -D DIN-Rail mounted and SD-S Screw mounting or TD-D DIN-Rail mounted (data sheet 10163) |
| **Fuse switches** | Fuse switch disconnectors vertical EBV and horizontal EBH (data sheets 10292 and 10293) |
| **Fuse rail** | Fuse rail vertical EBF (data sheet 10240) |
| **Standards** | IEC 60269-1 and 2, VDE 0636, DIN 43620 and CE |
| **Applications** | Alternative energy, utilities, industrial and motor applications |

## Low voltage — NH DIN Industrial fuse links range overview

| Voltage (V a.c.) | Class | Size | Amps | | | | | | | | | | | | | | | | | | | | | | | | | | | | | |
|---|---|---|---|---|---|---|---|---|---|---|---|---|---|---|---|---|---|---|---|---|---|---|---|---|---|---|---|---|---|---|---|---|
| | | | 2 | 4 | 6 | 10 | 16 | 20 | 25 | 32 | 35 | 40 | 50 | 63 | 80 | 100 | 125 | 160 | 200 | 224 | 250 | 300 | 315 | 355 | 400 | 425 | 450 | 500 | 630 | 800 | 1000 | 1250 |
| 400 | gG | 000 | 2 | 4 | 6 | 10 | 16 | 20 | 25 | 32 | 35 | 40 | 50 | 63 | 80 | 100 | | | | | | | | | | | | | | | | |
| | | 00 | | | | | | | | | | | | | | | 125 | 160 | | | | | | | | | | | | | | |
| | | 01 | | | | | | | | | 35 | 40 | 50 | 63 | 80 | 100 | 125 | 160 | | | | | | | | | | | | | | |
| | | 1 | | | | | | | | | | | | | | | | | 200 | 224 | 250 | | | | | | | | | | | |
| | | 02 | | | | | | | | | 35 | 40 | 50 | 63 | 80 | 100 | 125 | 160 | 200 | 224 | 250 | | | | | | | | | | | |
| | | 2 | | | | | | | | | | | | | | | | | | | | | 315 | 355 | 400 | | | | 630 | | | |
| | | 03 | | | | | | | | | | | | | | | | | | | 250 | | 315 | 355 | 400 | | | | | | | |
| | | 3 | | | | | | | | | | | | | | | | | | | | | | | | | | 500 | 630 | | | |
| 500 | gG | 000 | 2 | 4 | 6 | 10 | 16 | 20 | 25 | 32 | 35 | 40 | 50 | 63 | 80 | 100 | | | | | | | | | | | | | | | | |
| | | 00 | | | | | | | | | | | 50 | 63 | 80 | 100 | 125 | 160 | | | | | | | | | | | | | | |
| | | 0 | | | 6 | 10 | 16 | 20 | 25 | 32 | 35 | 40 | 50 | 63 | 80 | 100 | 125 | 160 | | | | | | | | | | | | | | |
| | | 01 | | | 6 | 10 | 16 | 20 | 25 | 32 | 35 | 40 | 50 | 63 | 80 | 100 | 125 | 160 | | | | | | | | | | | | | | |
| | | 1 | | | | | | | | | | | 50 | 63 | 80 | 100 | 125 | 160 | 200 | 224 | 250 | | 315 | 355 | | | | | | | | |
| | | 02 | | | | | | | | | 35 | 40 | 50 | 63 | 80 | 100 | 125 | 160 | 200 | 224 | 250 | | | | | | | | | | | |
| | | 2 | | | | | | | | | | | | | | | | | | | 250 | 300 | 315 | 355 | 400 | 425 | 450 | 500 | | | | |
| | | 03 | | | | | | | | | | | | | | | | | | | 250 | | 315 | 355 | 400 | | | | | | | |
| | | 3 | | | | | | | | | | | | | | | | | | | | | 315 | 355 | 400 | 425 | 450 | 500 | 630 | 800 | | |
| | | 4 | | | | | | | | | | | | | | | | | | | | | | | | | | 500 | 630 | 800 | 1000 | 1250 |
| 690 | gG | 000 | 2 | 4 | 6 | 10 | 16 | 20 | 25 | 32 | 35 | 40 | 50 | 63 | | | | | | | | | | | | | | | | | | |
| | | 00 | | | | | | | | | | | 50 | 63 | 80 | 100 | 125 | 160 | | | | | | | | | | | | | | |
| | | 1 | | | | | | | | | | | 50 | 63 | 80 | 100 | 125 | 160 | 200 | 224 | 250 | | | | | | | | | | | |
| | | 2 | | | | | | | | | | | | | | | | | 200 | 224 | 250 | | 315 | | | | | | | | | |
| | | 3 | | | | | | | | | | | | | | | | | | | 250 | | 315 | 355 | 400 | 425 | | 500 | | | | |
| | | 4 | | | | | | | | | | | | | | | | | | | | | | | | | | | 630 | 800 | | |
| 500 and 690 | aM | 000 | | | 6 | 10 | 16 | 20 | 25 | 32 | 35 | 40 | 50 | | | | | | | | | | | | | | | | | | | |
| | | 00 | | | | | | | | | | | | 63 | 80 | 100 | | | | | | | | | | | | | | | | |
| | | 1 | | | | | | | | | | | 50 | 63 | 80 | 100 | 125 | 160 | | | | | | | | | | | | | | |
| | | 2 | | | | | | | | | | | | | | | 125 | 160 | 200 | 224 | 250 | | 315 | 355 | | | | | | | | |
| | | 3 | | | | | | | | | | | | | | | | | | | | | 315 | 355 | 400 | | | 500 | | | | |

: Part available, for example Size 00 400 V is available in 125 and 160A

Data sheets: 400V gG: 720099, 500V gG 10164, 690V gG 720109, 500 and 690V aM: 10165

# Index


| Catalogue number | Page |
|---|---|
| EBC00013TBF | 25 |
| EBC00013TTF | 25 |
| EBC0003TF-D125 | 25 |
| EBC0003TF-D150 | 25 |
| EBC000O3TF | 25 |
| EBF00230S8 | 9 |
| EBF00230V0 | 9 |
| EBF00230V1 | 9 |
| EBF00330S8 | 10 |
| EBF00330V0 | 10 |
| EBF00330V1 | 10 |
| EBF2330-L | 14 |
| EBF2330M1 | 12 |
| EBF2330-R | 14 |
| EBF2330V1 | 12 |
| EBF2330W1 | 12 |
| EBF3330-L | 14 |
| EBF3330M1 | 13 |
| EBF3330-R | 14 |
| EBF3330V1 | 13 |
| EBF3330W1 | 13 |
| EBFVA1 | 17 and 72 |
| EBFVA10 | 17 and 72 |
| EBFVA11 | 17 and 72 |
| EBFVA12 | 17 and 72 |
| EBFVA13 | 17 |
| EBFVA14 | 17 and 72 |
| EBFVA15 | 17 |
| EBFVA16 | 17 and 72 |
| EBFVA17 | 18 and 73 |
| EBFVA18 | 18 and 73 |
| EBFVA19 | 18 and 73 |
| EBFVA2 | 17 and 72 |
| EBFVA20 | 18 and 73 |
| EBFVA21 | 18 and 73 |
| EBFVA22 | 18 |
| EBFVA23 | 18 and 73 |
| EBFVA24 | 18 and 73 |
| EBFVA25 | 18 and 73 |
| EBFVA26 | 18 and 73 |
| EBFVA27 | 18 and 73 |
| EBFVA28 | 18 and 73 |
| EBFVA29 | 18 and 73 |
| EBFVA3 | 17 and 72 |
| EBFVA31 | 18 |
| EBFVA32 | 72 |
| EBFVA33 | 72 |
| EBFVA34 | 72 |
| EBFVA35 | 72 |

| Catalogue number | Page |
|---|---|
| EBFVA36 | 72 |
| EBFVA37 | 72 |
| EBFVA38 | 72 |
| EBFVA39 | 73 |
| EBFVA4 | 17 and 72 |
| EBFVA6 | 17 and 72 |
| EBFVA7 | 17 and 72 |
| EBFVA8 | 17, 18 and 72 |
| EBFVA9 | 17 and 72 |
| EBH00013TBM8 | 23 |
| EBH00013TBS5 | 23 |
| EBH00013TTM8 | 23 |
| EBH00013TTS5 | 23 |
| EBH000O3TM8 | 23 |
| EBH000O3TM8-D | 23 |
| EBH000O3TM8L | 23 |
| EBH000O3TS5 | 23 |
| EBH000O3TS5-D | 23 |
| EBH000O3TS5L | 23 |
| EBH0013TBF | 30 |
| EBH0013TBM8 | 30 |
| EBH0013TBS5-E | 41 |
| EBH0013TTF | 30 |
| EBH0013TTM8 | 30 |
| EBH0013TTS5-E | 41 |
| EBH00O3TM8 | 28 |
| EBH00O3TM8L | 28 |
| EBH00O3TS5 | 28 |
| EBH00O3TS5-BE | 41 |
| EBH00O3TS5L | 28 |
| EBH00O3TS5-TE | 41 |
| EBH00O3TV1 | 28 |
| EBH113TBM1 | 35 |
| EBH113TBS8 | 35 |
| EBH113TBS8-E | 41 |
| EBH113TBV1 | 35 |
| EBH113TTS8 | 35 |
| EBH113TTS8-E | 41 |
| EBH113TTV1 | 35 |
| EBH123TBM1 | 35 |
| EBH123TBS8 | 35 |
| EBH123TBS8-E | 41 |
| EBH123TBV1 | 35 |
| EBH123TTM1 | 35 |
| EBH123TTS8 | 35 |
| EBH123TTS8-E | 41 |
| EBH123TTV1 | 35 |
| EBH1O3TM1 | 35 |
| EBH1O3TMV | 35 |

| Catalogue number | Page |
|---|---|
| EBH1O3TS8 | 35 |
| EBH1O3TS8-BE | 41 |
| EBH1O3TS8-TE | 41 |
| EBH1O3TSV | 35 |
| EBH1O3TV1 | 35 |
| EBH1O3TVM | 35 |
| EBH1O3TVS | 35 |
| EBH213TBM1 | 38 |
| EBH213TBS8-E | 41 |
| EBH213TBV1 | 38 |
| EBH213TBW1 | 38 |
| EBH213TTM1 | 38 |
| EBH213TTS8-E | 41 |
| EBH213TTV1 | 38 |
| EBH213TTW1 | 38 |
| EBH223TBM1 | 38 |
| EBH223TBS8-E | 41 |
| EBH223TBV1 | 38 |
| EBH223TBW1 | 38 |
| EBH223TTM1 | 38 |
| EBH223TTS8-E | 41 |
| EBH223TTV1 | 38 |
| EBH223TTW1 | 38 |
| EBH2O3TM1 | 38 |
| EBH2O3TS8 | 38 |
| EBH2O3TS8-BE | 41 |
| EBH2O3TS8-TE | 41 |
| EBH2O3TV1 | 38 |
| EBH2O3TW1 | 38 |
| EBH313TM2 | 40 |
| EBH3O3TM2 | 40 |
| EBH3O3TS8 | 40 |
| EBHA1 | 52 |
| EBHA10 | 52 |
| EBHA11 | 52 |
| EBHA12 | 52 |
| EBHA13 | 52 |
| EBHA2 | 52 |
| EBHA3 | 52 |
| EBHA4 | 52 |
| EBHA5 | 52 |
| EBHA6 | 52 |
| EBHA7 | 52 |
| EBHA8 | 52 |
| EBHA9 | 52 |
| EBHOO03TV1L | 28 |
| EBV0011SS8 | 59 |
| EBV0011SV0 | 59 |
| EBV0011SV1 | 59 |

# Index


| Catalogue number | Page |
|---|---|
| EBV0011TS8 | 59 |
| EBV0011TV0 | 59 |
| EBV0011TV1 | 59 |
| EBV0023TS8 | 58 |
| EBV0023TV0 | 58 |
| EBV0023TV1 | 58 |
| EBV0033SS8 | 59 |
| EBV0033SV0 | 59 |
| EBV0033SV1 | 59 |
| EBV0033TS8 | 59 |
| EBV0033TV0 | 59 |
| EBV0033TV1 | 59 |
| EBV223SW0 | 62 |
| EBV233SM1 | 62 |
| EBV233SM1-E | 66 |
| EBV233SM2-L | 64 |
| EBV233SM2-R | 64 |
| EBV233SV0 | 62 |
| EBV233SV0-E | 66 |
| EBV233SV1 | 62 |
| EBV233SV1-E | 66 |
| EBV233SW0-E | 66 |
| EBV233SW1 | 62 |
| EBV233SW1-E | 66 |
| EBV233TM1 | 62 |
| EBV233TM1-E | 66 |
| EBV233TM2-L | 64 |
| EBV233TM2-R | 64 |
| EBV233TV0 | 62 |
| EBV233TV0-E | 66 |
| EBV233TV1 | 62 |
| EBV233TV1-E | 66 |
| EBV233TW0 | 62 |
| EBV233TW0-E | 66 |
| EBV233TW1 | 62 |
| EBV233TW1-E | 66 |
| EBV3-1250-3-2M-L | 64 |
| EBV3-1250-3-3M-R | 64 |
| EBV333SM2 | 63 |
| EBV333SM2-E | 66 |
| EBV333SM2-L | 64 |
| EBV333SM2-R | 64 |
| EBV333SV0 | 63 |
| EBV333SV0-E | 66 |
| EBV333SV1 | 63 |
| EBV333SV1-E | 66 |
| EBV333SW0 | 63 |
| EBV333SW0-E | 66 |
| EBV333SW1 | 63 |

| Catalogue number | Page |
|---|---|
| EBV333SW1-E | 66 |
| EBV333TM2 | 63 |
| EBV333TM2-E | 66 |
| EBV333TM2-L | 64 |
| EBV333TM2-R | 64 |
| EBV333TV0 | 63 |
| EBV333TV0-E | 66 |
| EBV333TV1 | 63 |
| EBV333TV1-E | 66 |
| EBV333TW0 | 63 |
| EBV333TW0-E | 66 |
| EBV333TW1 | 63 |
| EBV333TW1-E | 66 |

# Notes

# Contact details

## Customer Satisfaction team

Eaton's Customer Satisfaction team is available to answer questions regarding Bussmann series products.

Calls can be made between:

| | |
|---|---|
| Monday - Thursday | 7.30 a.m. - 5.30 p.m. GMT |
| Friday | 7.30 a.m. - 5.00 p.m. GMT |

The Customer Satisfaction team can be reached via:

Phone: 00 44 (0) 1509 882 600

Fax: 00 44 (0) 1509 882 786

Email: bulesales@eaton.com

## www.my.eaton.com

Tailored just for you. Powerful online tools and resources get you the up-to-date information you need to work smarter, make informed decisions and streamline your transactions with Eaton.
Get started today at www.my.eaton.com by clicking 'Request User ID and Password'.

- Easy to Navigate
- Simple to Use
- Real-Time Data.

## Online resources

Visit www.eaton.com/bussmannseries for the following resources:

- Product cross reference
- Product profiles
- Online catalogues for the latest United States and European catalogues.

## Application engineering

Application Engineering assistance is available to all customers. The Application Engineering team is staffed by university-qualified electrical engineers who are available with technical and application support.

Calls can be made between:

| | |
|---|---|
| Monday - Thursday | 8.30 a.m. - 4.30 p.m. GMT |
| Friday | 8.30 a.m. - 4.00 p.m. GMT |

Application Engineering can be reached via:

| | |
|---|---|
| Phone: | 00 44 (0) 1509 882 699 |
| Fax: | 00 44 (0) 1509 882 794 |

General technical enquiries:
buletechnical@eaton.com

High speed technical enquiries:
bulehighspeedtechnical@eaton.com

At Eaton, we're energized by the challenge of powering a world that demands more. With over 100 years experience in electrical power management, we have the expertise to see beyond today. From groundbreaking products to turnkey design and engineering services, critical industries around the globe count on Eaton.

We power businesses with reliable, efficient and safe electrical power management solutions. Combined with our personal service, support and bold thinking, we are answering tomorrow's needs today. Follow the charge with Eaton. Visit eaton.com/electrical.

## Contact your local Eaton office

Eaton
Melton Road
Burton-on-the-Wolds
LE12 5TH
Leicestershire
United Kingdom
bulesales@eaton.com
www.eaton.com/bussmannseries

**Eaton**
EMEA Headquarters
Route de la Longeraie 7
1110 Morges, Switzerland
Eaton.eu

© 2016 Eaton
All Rights Reserved
Printed in the United Kingdom
Publication No. CA132061EN
July 2016

Changes to the products, to the information contained in this document, and to prices are reserved; so are errors and omissions. Only order confirmations and technical documentation by Eaton is binding. Photos and pictures also do not warrant a specific layout or functionality. Their use in whatever form is subject to prior approval by Eaton. The same applies to Trademarks (especially Eaton, Moeller, and Cutler-Hammer). The Terms and Conditions of Eaton apply, as referenced on Eaton Internet pages and Eaton order confirmations.

Eaton is a registered trademark.

All other trademarks are property of their respective owners.

Powering Business Worldwide

Follow us on social media to get the latest product and support information.